FISHER & PAYKEL

FREESTANDING COOKER

OR90SDG6, OR90SCG6 & OR90SPG6 models

USER GUIDE

NZ AU UK IE

⚠ WARNING!

If the information in this manual is not followed exactly, a fire or explosion may result causing property damage, personal injury or death.

Do not store or use gasoline or other flammable vapours and liquids in the vicinity of this or any other appliance.

NEVER use this appliance as a space heater to heat or warm the room. Doing so may result in carbon monoxide poisoning and overheating of the appliance.

WHAT TO DO IF YOU SMELL GAS

- **Do not try to light any appliance.**
- **Do not touch any electrical switch.**
- **Do not use any phone in your building.**
- **Immediately call your gas supplier from a neighbour's phone. Follow the gas supplier's instructions.**
- **If you cannot reach your gas supplier, call the fire department.**

Installation and service must be performed by a qualified installer, service agency or the gas supplier.

CONTENTS

Safety and warnings	5
Introduction	12
First use	13
Cooking guide	20
Oven functions	22
Cooking charts	26
Setting the timer	32
Auto Cook	34
Using the rotisserie	38
Locking the oven controls	40
User preference settings	42
Sabbath Mode	44
Using your gas cooktop	46
Cooking guidelines and cookware	49
Using the warming drawer	51
Care and cleaning	52
Using the Self Clean function	64
Troubleshooting	67
Alert codes	72
Warranty and service	74
Energy guidelines (UK IE only)	76

Registration

To register your product visit our website: fisherpaykel.com/register

⚠ WARNING!



Explosion Hazard

Failure to follow this advice may result in death or serious injury.

- Do not store flammable materials such as gasoline near the cooktop.
- Do not use or store flammable materials in the appliance drawer or near this appliance
- Do not spray aerosols on the vicinity of this appliance while it is in operation.

⚠ WARNING!



Electrical Shock Hazard

Failure to follow this advice may result in electrical shock or death.

- Switch the cooker off at the wall before replacing fuses or the oven lamp.

⚠ WARNING!



Poisoning Hazard

Failure to follow this advice may result in poisoning or death.

- Do not use this appliance as a space heater. Doing so may result in carbon monoxide poisoning and overheating of the appliance.

⚠ WARNING!	
	**Cut Hazard** **Failure to use caution could result in injury or cuts.** • Take care - some edges are sharp.

⚠ WARNING!	
	**Fire Hazard** **Failure to follow this advice may result in overheating, burning, and injury.** • Never leave the cooktop unattended when in use. Boilover causes smoking and greasy spillovers that may ignite. • Do not place aluminium foil, dishes, trays, water or ice on the oven floor during cooking, as doing so will irreversibly damage the enamel; lining the oven with aluminium foil may even cause fire. • Never use your appliance for warming or heating the room. Persons could be burned or injured or a fire could start. • Storage in or on appliance: flammable materials should not be stored in an oven or near its surface.

⚠ WARNING!	
	**Hot Surface Hazard** **Failure to follow this advice could result in burns and scalds.** • Accessible parts may become hot when this cooker is in use. • To avoid burns and scalds keep children away. • Do not touch hot surfaces inside the oven. • Use oven mitts or other protection when handling hot surfaces such as oven shelves or dishes. • Take care when opening the oven door. • Let hot air or steam escape before removing or replacing food. • Do not touch the cooktop components, burners, trivets/pan supports or the base when hot. • Before cleaning, turn the cooker off and make sure it is cool.

IMPORTANT SAFETY INSTRUCTIONS!

- **Read all the instructions before using the appliance. Use the appliance only for its intended purpose as described in these instructions.**
- **Proper installation: be sure your appliance is properly installed and earthed by a qualified technician. A risk of tip-over exists when the appliance is not installed in accordance with the installation instructions.**
- **Do not operate the appliance if it is damaged or not working properly. If you received a damaged product, contact your dealer or installer immediately.**
- **Clean only the parts listed in this manual.**
- **Do not modify this appliance.**
- **This appliance is to be serviced only by a Fisher & Paykel trained and supported service technician.**
- **Isolating switch: make sure this cooker is connected to a circuit which incorporates an isolating switch providing full disconnection from the power supply.**
- **Household appliances are not intended to be played with by children.**
- **Do not leave children alone – children should not be left alone or unattended in the area where the appliance is in use. They should never be allowed to play with the appliance or to sit or stand on any part of the appliance.**
- **Children of less than 8 years old must be kept away from the appliance unless continuously supervised. This appliance can be used by children aged from 8 years and above, and persons with reduced physical, sensory or mental capabilities or lack of experience and knowledge, if they have been given supervision or instruction concerning the use of the appliance in a safe way and they understand the hazards involved. Cleaning and user maintenance shall not be done by children without supervision.**

IMPORTANT SAFETY INSTRUCTIONS!

- **Do not store things children might want above the oven. Children could be burned or injured while climbing on the oven to retrieve items.**
- **Safe food handling: leave food in the oven for as short a time as possible before and after cooking. This is to avoid contamination by organisms which may cause food poisoning. Take particular care during warmer weather.**
- **Do not place aluminium foil, dishes, trays, water or ice on the oven floor during cooking as this will irreversibly damage the enamel.**
- **Do not use aluminum foil to line any part of the oven, storage drawer or cooktop. This will cause heat to be trapped underneath it. This trapped heat can upset the cooking performance and damage the finish of the oven or cooktop parts.**
- **Do not stand on the door, or place heavy objects on it.**
- **Do not use harsh abrasive cleaners or sharp metal scrapers to clean the oven door glass since they scratch the surface, which may result in shattering of the glass.**
- **Do not use a steam cleaner to clean any part of the cooker.**
- **Do not use an asbestos mat or decorative covers between the flame and the saucepan as this may cause serious damage to your cooktop.**
- **Do not store flammable items in the oven or storage drawer or on the cooktop surface.**

IMPORTANT SAFETY INSTRUCTIONS!

- **Do not place aluminium foil or plastic dishes on the cooktop burners.**
- **Do not let large saucepans or frying pans overlap the bench as this can deflect heat onto your benchtop and damage the surface.**
- **Do not let large saucepans, frying pans or woks push any other pans aside. This could make them unstable or deflect heat onto your benchtop and damage the surface.**
- **Saucepan handles may be hot to touch. Ensure saucepan handles do not overhang other gas burners that are on. Keep handles out of reach of children.**
- **If the electrical supply cord is damaged, it must only be replaced by a qualified technician.**
- **This cooker is not to be used as a space heater, especially if it is installed in marine craft or in a caravan.**
- **The use of a gas cooking appliance results in the production of heat and moisture in the room in which it is installed. Ensure the kitchen is well ventilated. Keep natural ventilation holes open or install a mechanical ventilation device (mechanical extractor hood). Prolonged intensive use of the appliance may call for additional ventilation, for example opening of a window, or more effective ventilation, for example increasing the level of mechanical ventilation where present.**

IMPORTANT SAFETY INSTRUCTIONS!

- **Wear proper apparel. Do not wear loose fitting or hanging garments when using the appliance. They could ignite or melt if they touch an element or hot surface and you could be burned.**
- **Always keep oven vents unobstructed.**
- **Use only dry oven mitts or potholders. Moist or damp potholders on hot surfaces could result in burns from steam. Do not let potholders touch hot areas or heating elements. Do not use a towel or a bulky cloth for a potholder. It could catch fire.**
- **Caution: hot air can blow from the vent at the top of the oven as part of the oven's cooling system.**
- **Placement of oven shelves: always position shelves in the desired location before preheating the oven. If a shelf must be removed while the oven is hot, do not let the oven mitts or potholder contact hot heating elements in the oven or the base of the oven.**
- **This appliance is not intended to be operated by means of an external timer or separate remote-control system.**

Light source information – EU/UK only

- **This product contains a light source of energy efficiency class G. The light source used in this appliance is not suitable for room illumination.**

Before you start

1. Make sure that the anti-tip bracket at the right rear of the cooker has been properly installed.
2. Make sure that the installer has completed the 'Final checklist' in the Installation instructions.
3. Read this guide, taking special note of the 'Safety and warnings' section.
4. Remove all accessories and packaging from the oven and cooktop. Recycle items that you can. If any adhesive residue is left on surfaces, remove this using dishwashing liquid on a soft cloth. Do not use any harsh or abrasive cleaners.
5. Make sure you follow the instructions under 'First use' before using your cooker for cooking.

Overview

Features and styling may vary.

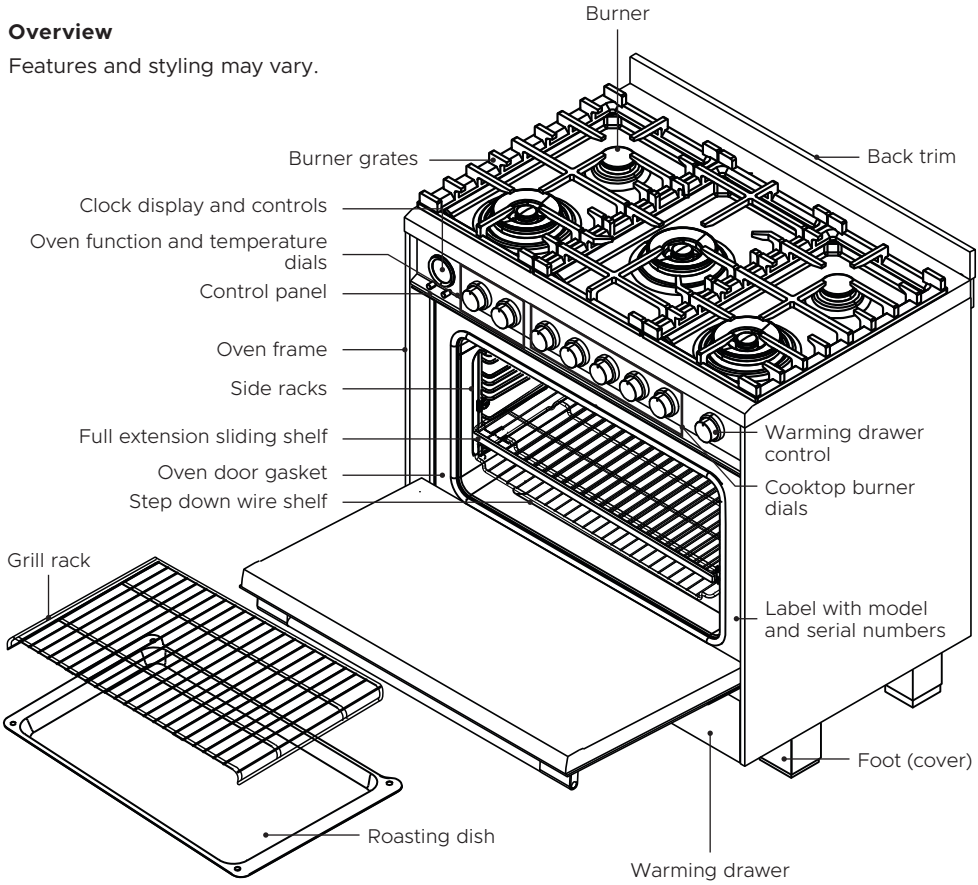

Control panel layout

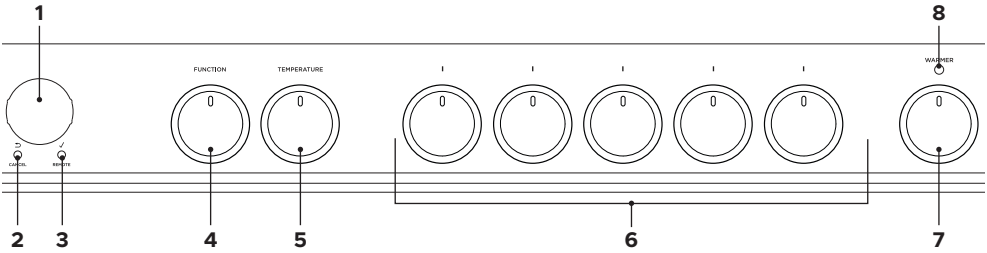

1 Oven display
2 Cancel/back button
3 Select/Scroll control
4 Function dial
5 Temperature dial
6 Cooktop control dials
7 Warming drawer dial
8 Warming drawer indicator

Clock display and controls

Timer (see ‘Setting the timer’)

Auto Cook
(see ‘Auto Cook’)

Lock
(see ‘Locking the oven controls’)

Remote Mode
(not available on this product)

Wireless connection
(not available on this product)

Rotisserie (see ‘Using the rotisserie’)

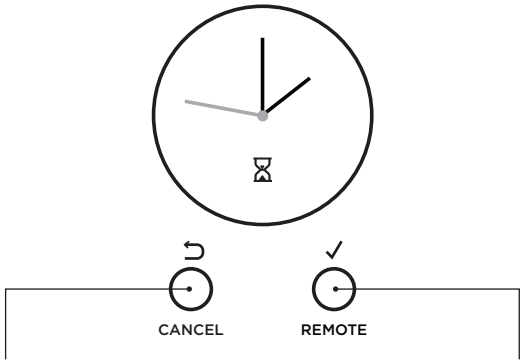

Cancel/back button

- Press to go back
- Press and hold to cancel

Select

- Press to accept or to enter a menu (Remote mode is not available on this product)

Scroll control

- Turn clockwise or anticlockwise to scroll through menu options

Setting the clock

When your oven is first turned on, or after a power cut, the display will flash. You will need to set the clock in order to use the oven.

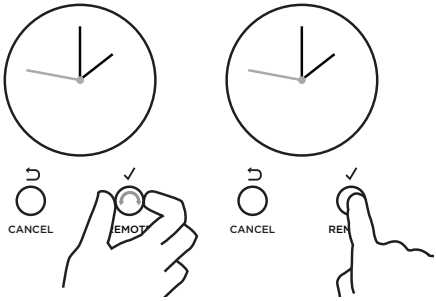

1 Scroll to choose your preferred clock display. Select between:

- Analog
- 24-hr digital
- 12-hr digital
- Display off**

2 Press ✓ to confirm.

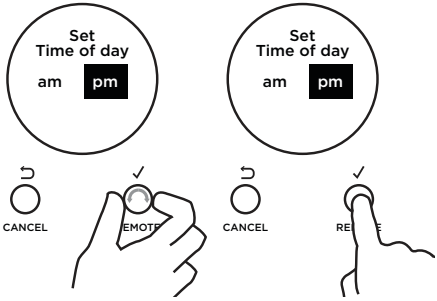

2 A If you have set analog or 12-hr digital display:

- Scroll to select am or pm.
- Press ✓ to confirm.

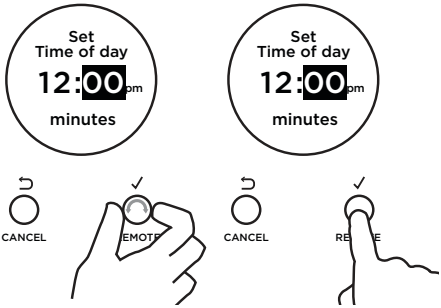

3 Scroll to set the minutes.

- Scroll to select am or pm.
- Press ✓ to confirm.

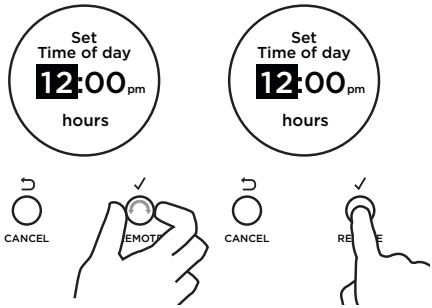

4 Scroll to set the hours.

- Press ✓ to confirm.

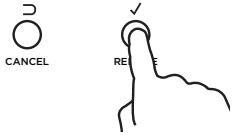

5 Press ✓ to confirm the time is correctly set.

- The clock is now set and you can begin using your oven.

** With this option saved, you can still use the oven and timer, however the display will remain unlit.

You cannot use any automatic cooking functions when this option is selected.

To quit this option and enable the display, press and hold CANCEL.

Positioning the shelves

- Shelf positions are numbered from the bottom.
- Position the shelves you will need before turning the oven on.
- For advice on which shelf position to use, see sections ‘Oven functions’, ‘Cooking guide’, and ‘Cooking charts’.

IMPORTANT!

Always position the oven shelves before turning the oven on. Remove any unused shelves and baking utensils from the oven.

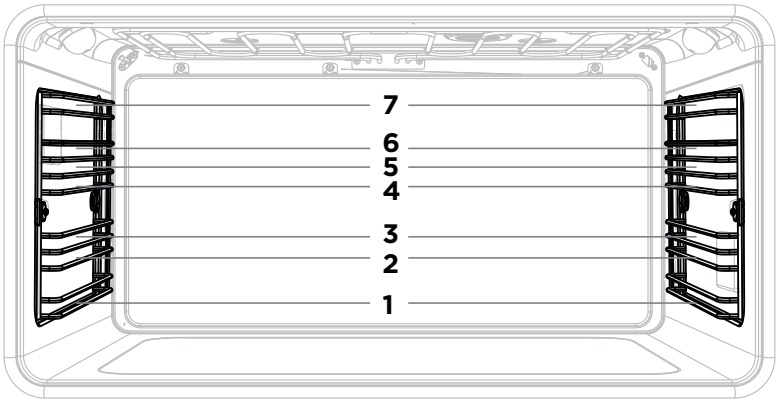

Oven shelves

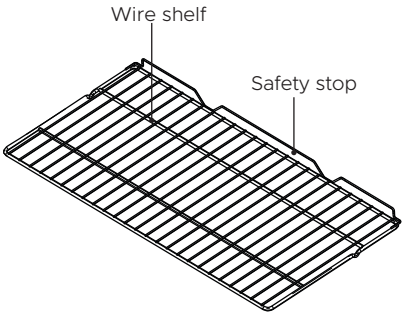

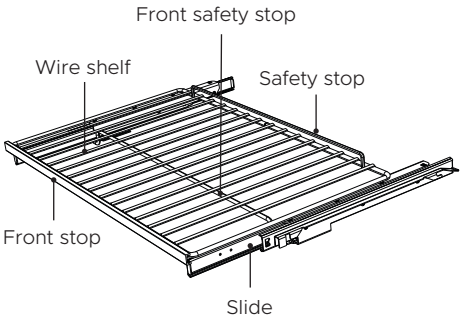

Flat wire shelf and step-down wire shelf (not pictured)

- These shelves have safety stops to keep them from sliding out of the oven when pulled forward.
- The front stops prevent the shelves from hitting against the back of the oven.

Full extension sliding shelf

- The wire shelves and slides are built together as one unit.
- When positioned correctly, the slides will prevent the wire shelves from tilting when pulled forward.
- Beware: these shelves are heavy.

To insert the sliding shelves

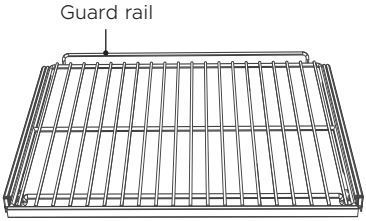

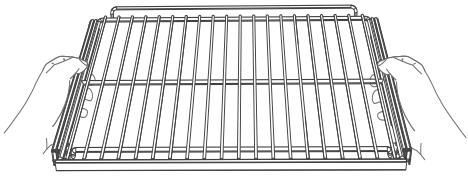

1 Make sure the guard rail is at the back, facing up and the slides are not extended.

2 Hold the shelf firmly with both hands, making sure you grip the wire shelf too to stop it sliding forward.

3 Hook the rear tags over the wires of the desired shelf position on both side racks.

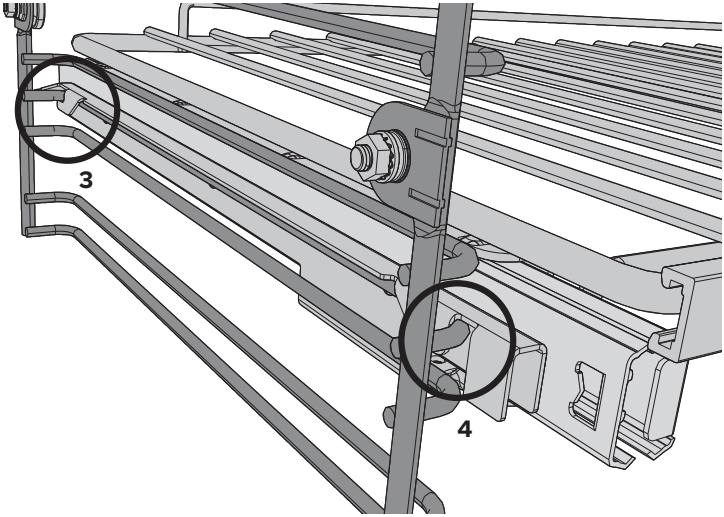

4 Push the shelf all the way into the oven, ensuring the front and rear tags either side are securely locked behind the side rack wires.

To remove the shelves

1 **Wait for the oven to cool down completely.**

2 Hold the shelf firmly with both hands, making sure you grip the wire shelf too to stop it sliding forward.

3 Pull the shelf forward about ¾ of the way.

4 Lift the rear of the shelf slightly so that the tags clear the side rack wires, then remove.

To insert the wire shelves

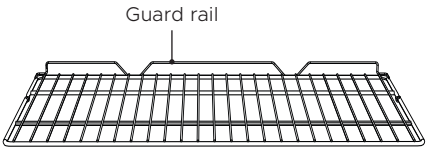

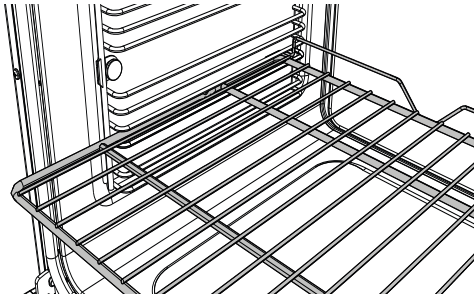

1 Make sure the guard rail is at the back, facing up.

2 Position the shelf: it should rest on the side rack wires, as shown.

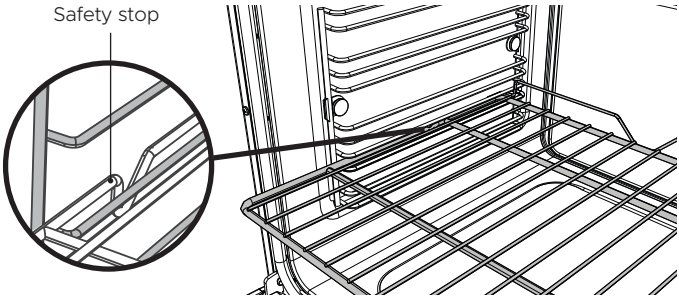

3 Tilt the front up slightly to help the safety stops clear the side rack wires.

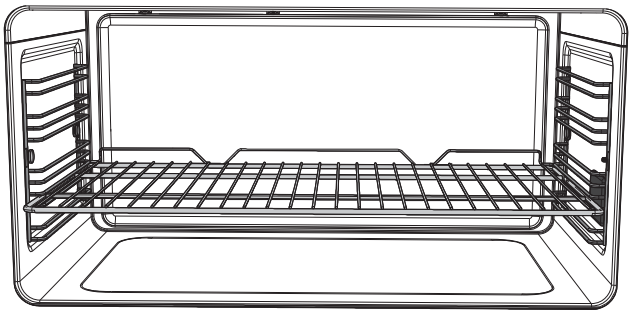

4 Lower the shelf back onto the side rack wires and slide all the way into the oven.

To remove the shelves

1 Wait for the oven to cool down completely.
2 Pull the shelf forward about ¾ of the way.
3 Tilt the front up slightly to help the safety stops clear the side rack wires.
4 Remove the shelf.

Conditioning the oven

It is important to condition your oven before using it for cooking and baking. Conditioning will burn off any manufacturing residues and ensure that you get the best results right from the start.

Before you start:

- Make sure you have removed all packaging and any cable ties used to secure the shelving during transit.
- Make sure all shelves are fitted in the oven.
- Make sure all oven control dials are turned to **O** (OFF).

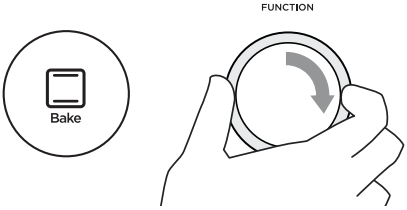

1 Select the Bake function.

- The halo will glow white.

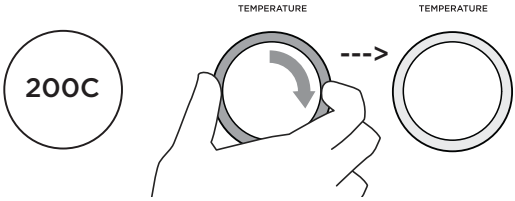

2 Set the temperature to 200°C for 30 minutes.

- The halo will glow red while the oven is heating up.
- The actual temp will show on the screen.
- When the oven has heated a tone will sound and the halo will turn white.

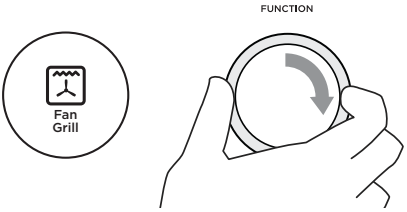

3 After 30 minutes, select the Fan Grill function.

- Heat at 200°C for 10 minutes.

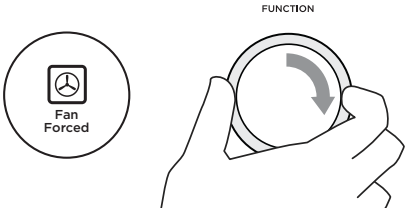

4 After 10 minutes, select the Fan Forced function.

- Heat at 200°C for 20 minutes.

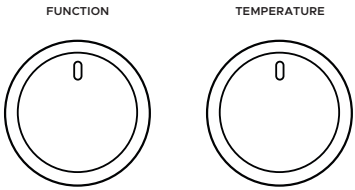

5 After 20 minutes turn both the function and temperature dials to **O** (OFF). The halos will go out.

- There will be a distinctive smell and a small amount of smoke during the conditioning process as manufacturing residue is burnt off. This is normal, but make sure the kitchen is well ventilated during the conditioning.
- Once cooled, wipe out the oven and warmer drawer with a damp cloth and mild detergent, and dry thoroughly.

Conditioning the warming drawer

IMPORTANT!

Make sure the drawer is empty and all packaging has been removed.

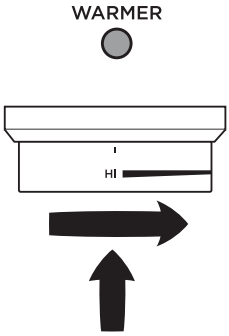

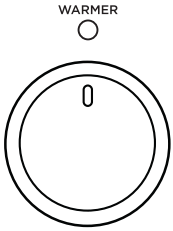

1 Push in the warmer dial and turn clockwise to **HI**.

- Heat on **HI** for 2 hours.

2 After 2 hours turn warmer dial to **O** (OFF).

- The indicator will go out.

- There will be a distinctive smell and a small amount of smoke during the conditioning process as manufacturing residue is burnt off. This is normal, but make sure the kitchen is well ventilated during the conditioning.
- Once cooled, wipe out the drawer with a damp cloth and mild detergent, and dry thoroughly.

Rapid preheating stage

For some cooking functions, the oven will go through an initial rapid preheat stage. In this stage, the fan and both bake and grill elements will turn on to quickly heat the oven to the set temperature. Depending on the cooking function, the fan, bake and grill elements will turn off once the oven reaches the set temperature.

Oven cooking guidelines

IMPORTANT!

- Use all the oven modes with the oven door closed.
- Never use aluminum foil to cover the oven shelves or to line the floor of the oven. The trapped heat can irreversibly damage the enamel and may even cause fire.
- Do not place water, ice, or any dish or tray directly on the oven floor, as this will irreversibly damage the enamel.
- Do not cover the roasting dish with aluminum foil. This will catch the grease and could cause fire.
- Do not use plastic wrap or wax paper in the oven.
- For food safety reasons, do not leave food in the oven for longer than two hours before and after cooking or defrosting. This is to avoid contamination by organisms which may cause food poisoning. Take particular care during warmer weather.
- In the event of power failure while cooking, return the oven dials in off position to prevent overheating of the appliance.

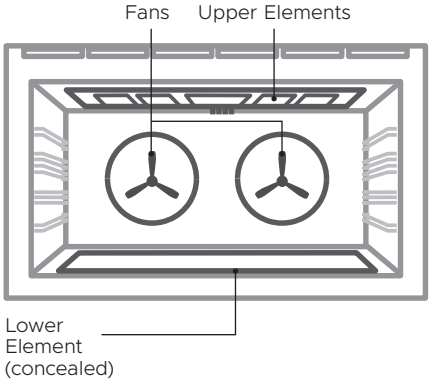

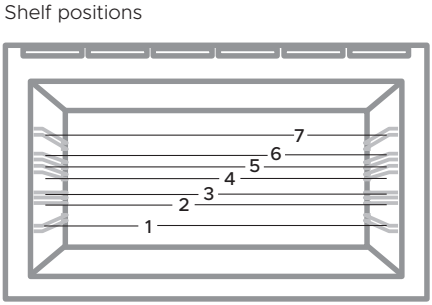

Baking

- For best results when baking, always preheat your oven. The temperature halo will change from red to white when the set temperature is reached.
- While the oven is heating the grill element will be on.
- We advise you do not open the door until at least ¾of the way through cooking.
- Make sure cake pans do not touch each other or the sides of the oven.
- When baking double the recipe (especially cookies) cook time may need to increase.
- Your cookware will influence baking times. Dark pans absorb the heat more quickly than reflective pans; glass cookware may require a lower temperature.
- Multi-shelf baking may also require a slight increase in cooking time.

Shelf Position Guide

- Single shelf: place your baking on a shelf that will have the top of your pan near the center of the oven cavity.
- Multi shelf: always leave a space between shelves to allow the air to circulate.

Oven cooking guidelines

Roasting

- The Roast function is designed to brown the outside of the meat but still keep the inside moist and juicy.
- Boneless, rolled or stuffed roasts take longer than roasts containing bones.
- Poultry should be well cooked with the juices running clear and an internal temperature of 74°C.
- If using a roasting bag, do not use the Roast function. The initial searing stage is too hot for roasting bags. Use Fan Bake or Fan Forced and follow the manufacturer's instructions.
- When using the Roast function, do not cover your roast, as this will stop the searing process browning the outside of the meat. If you prefer to roast in a covered pan, use the Fan Bake function instead and increase the temperature by 20°C.
- Cook larger cuts of meat at a lower temperature for a longer time. The meat will cook more evenly.
- Always roast meat fat side up. That way, basting may not be required.
- Always rest the meat for at least 10 minutes after roasting to allow the juices to settle.
- Remember the meat will continue to cook for a few minutes after removing it from the oven.

Shelf Position Guide

Place the meat on a shelf so that is is in the center of the oven or lower.

Grilling

- This is a healthier alternative to frying.
- Always grill with the oven door completely shut.
- For best results allow 5 minutes of preheat before placing food in the oven.
- If you use glass or ceramic pans, be sure they can withstand the high temperatures of the grill.
- To avoid piercing the meat and letting juices escape, use tongs or a spatula to turn the meat halfway through cooking.
- Brush meat with a little oil to help keep the meat moist during cooking. Alternatively marinade the meat before grilling (but be aware that some marinades may burn easily).
- Where possible grill cuts of meat of a similar thickness at the same time. This will ensure even cooking.
- Always keep a close watch on your food while grilling to avoid charring or burning.

Shelf Position Guide

- For thinner cuts of meat, toasting or browning foods, use a higher shelf position.
- Thicker cuts of meats should be grilled on lower shelves or at a lower grill setting to ensure even cooking.

Reheating

- Use Bake or Fan Bake to reheat food.
- Bake and Fan Bake are particularly good for reheating pastry based items, as the base heat will help re-crisp the pastry case.
- Always reheat food to piping hot. This reduces the risk of contamination by harmful bacteria.
- Once hot, set the oven temperature to WARM or use the warming drawer to keep food hot.
- Never reheat food more than once.

IMPORTANT!

- Use all the functions with the oven door closed.



Bake

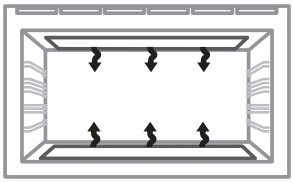

Upper outer and lower elements

- Heat comes from both the upper and lower elements. The fan is not used in this function.
- Ideal for cakes and foods that require baking for a long time or at low temperatures.
- This function is not suitable for multi-shelf cooking.

Ideal for moist foods that take a longer time to cook eg rich fruit cake, or bread.



Fan Forced

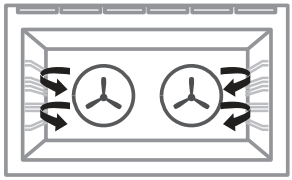

Fan and rear element

- By using the central rear heating element and fan, hot air is blown into the cavity, providing a consistent temperature at all levels, making it perfect for multi-shelf cooking.
- Trays of cookies cooked on different shelves are crisp on the outside and chewy in the middle.
- Meat and poultry are deliciously browned and sizzling while remaining juicy and tender.
- Casseroles are cooked to perfection and reheating is quick and efficient.
- When multi-shelf cooking it is important to leave a gap between trays (eg use shelves 3 & 5) to allow the air to move freely. This enables the browning of foods on the lower tray.
- If converting a recipe from Bake to Fan Forced, we recommend that you decrease the bake time or decrease the temperature by approximately 20°C.
- For items with longer bake times (eg over an hour) it may be necessary to decrease both time and temperature.

Ideal for multi-shelf cooking biscuits, cookies, scones, muffins and cupcakes.



Grill

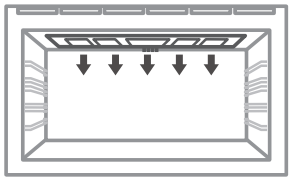

Upper inner and outer elements

- Intense radiant heat is delivered from both top elements. You can use Grill on Low OR High (100% power).
- For best results allow 5 minutes of preheat before placing food in the oven.
- The temperature halo will remain white while using the Grill function.
- The most suitable function for 'finishing off' many meals, for example browning the top of potato gratin and frittata.
- Ensure you centre the dish under the inner grill element.

Ideal for toasting bread or for top browning to 'finish off dishes'.



Fan Grill

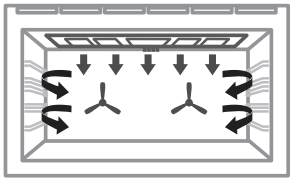

Fan plus upper inner and outer elements

- This function uses the intense heat from the elements for top browning and the fan to ensure even cooking of foods.
- Meat, poultry and vegetables cook beautifully; food is crisp and brown on the outside while the inside remains moist and tender.

Ideal for whole chicken, tenderloin of beef or grilling your favourite chicken, fish or steak.



Fan Bake

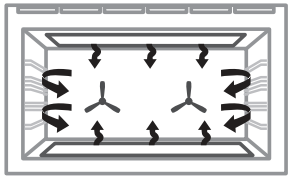

Fan plus upper outer and lower elements

- The oven fan circulates hot air from the top outer and the lower elements and distributes it around the oven cavity.
- Food cooked tends to brown more quickly than foods cooked on the traditional Bake function.
- You may need to decrease the time from that recommended in traditional recipes.

Ideal for single shelf baking that takes less than an hour to cook – foods such as muffins, biscuits and cupcakes or things like enchiladas.



Pastry Bake + Pizza

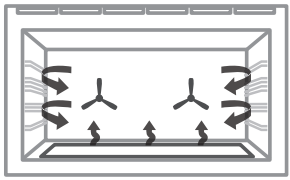

Fan plus lower element

- The fan circulates heat from the lower element throughout the oven.
- Excellent for cooking pizza and flatbreads as it crisps the base beautifully without overcooking the top.
- Set the temperature to PIZZA for optimum pizza cooking temperature.

Ideal for foods such as sweet and savoury pastry foods and delicate foods that require some top browning eg frittata, quiche.



Roast

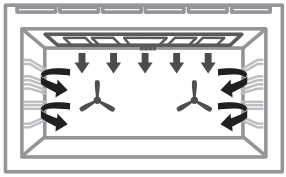

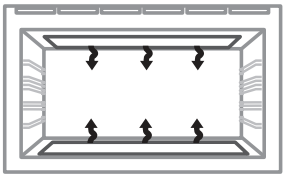

Fan plus upper and lower elements

- A two-step program. An initial 20 minute searing stage crisps and browns the roast and caramelises the outside of the meat, then the temperature drops to the level you have preset for the remainder of the cooking period, producing a tender and juicy roast that is full of flavor.
- Oven does not require preheating.
- If desired, use the roasting dish, or place vegetables under the roast to allow the juices to drain away from your meat. This will allow the hot air to circulate under the meat as well.

Ideal for Roasting meat, chicken and vegetables.



Slow Cook
(some models only)

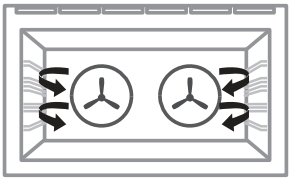

Fan plus rear element

- The fan circulates heat from the rear element to gently cook food.
- This function has low energy consumption - oven lights will remain off and vents will remain closed for the duration of cooking to conserve energy (you may observe some moisture generation during this time).
- Oven does not require preheating.

Ideal for slow-cooked dishes such as casseroles, stews and braises.



Rapid Proof
(some models only)

This is not a cooking function

- Gentle heat is generated from the upper and lower elements.
- Provides the optimum warm and draft-free environment for proving yeast dough.
- This method provides a faster proof time than at room temperature.
- To prevent overproofing we recommend you check the dough every 30mins.

Proving dough

1. Place dough in a lightly oiled bowl and cover with plastic wrap and/or a clean damp cloth.
2. Position the bowl in the center of the oven.
3. Select Rapid Proof function.

SELF
CLEAN

Self Clean

This is not a cooking function

- Self Clean takes care of the mess and grime that is traditionally associated with oven cleaning.
- There are two Self-Clean cycles available:
  - Standard clean (which takes a minimum of 4 hours) for normal to heavy cleaning.
  - Light clean (which takes a minimum of 3 hours) for lightly soiled ovens.
- Always clean the inner door glass pane first.
- See ‘Using the Self Clean function’ for details.

COOKING CHARTS

- Shelf positions are counted from the base up (1 is the lowest, 7 is the highest). Position shelves before you turn the oven on.
- For best results preheat the oven.
- Multi-shelf cooking may need the shelves rotating midway through cooking.
- Oven accessories may temporarily deform slightly when they become hot. This is normal and does not affect their function.

The information in these charts are guidelines only. Refer to your recipe or the packaging and be prepared to adjust the cooking times and settings accordingly.

BAKING	SHELVES	FUNCTION	SHELF POSITION	TEMP (°C)	TIME (MIN)
BISCUITS					
Plain	Single	Fan Bake	3	210-220	8-10
	Multi	Fan Forced	1 and 4 or 2 and 5	215-230	10-12
Chewy chocolate chip	Single	Fan Bake	3	180-190	10-15
	Multi	Fan Forced	1 and 4 or 2 and 5	160-170	10-15
Oatmeal	Single	Fan Bake	3	160-170	12-15
CAKES					
Vanilla	Single	Bake	3	160-165	30-35
Pound cake	Single	Bake	3	160	70-80
Butter/chocolate	Single	Bake	3	160-180	50-60
Chocolate brownie (20x20cm)	Single	Bake or Classic Bake	3	175	20-25
Rich fruit	Single	Bake or Classic Bake	3	135-150	3-6 hrs
Light fruit	Single	Bake	3	155-165	60-90
Sponge (single large)	Single	Bake	3	170-180	30-40
Sponge (20x20cm)	Single	Bake	3	170-180	15-25
SHORTBREAD					
	Single	Pastry Bake	3	130-140	20-25
	Multi	Fan Forced	2 and 5	140	30-35
MUFFINS/CUPCAKES					

COOKING CHARTS

BAKING	SHELVES	FUNCTION	SHELF POSITION	TEMP (°C)	TIME (MIN)
Cupcakes	Single	Fan Bake	3	185	15-20
	Multi	Fan Forced	1 and 4 or 2 and 5	170	20-25
Muffins	Single	Fan Bake	3	170	25-30
	Multi	Fan Forced	1 and 4 or 2 and 5	170	25-30
SCONES	Single	Bake	3	215-230	10-15
MERINGUES	Single	Bake	3	100-120	60-70
BREAD / BREAD ROLLS					
Sandwich loaf (23x13cm loaf tin)	Single	Bake	3	200-220	40-50
Wholewheat loaf (23x13cm loaf tin)	Single	Bake	3	200-220	35-45
Soft bread rolls	Single	Bake	3	190	15-18
Dough Proof	Single	Rapid Proof	3	PrF	30
PASTRY					
Pastry case (baked blind)	Single	Pastry Bake	2 or 3	175	15
Filo	Single	Fan Bake	3	200	15-25
Flaky/puff	Single	Fan Bake	3	185-200	20-30
Choux	Single	Fan Bake	3	200-210	30-35
	Multi	Fan Forced	1 and 4 or 2 and 5	200-210	30-35
Croissants	Single	Fan Bake	3	190-200	15-25
	Multi	Fan Forced	1 and 4 or 2 and 5	190-200	15-25
PIES					

COOKING CHARTS

BAKING	SHELVES	FUNCTION	SHELF POSITION	TEMP (°C)	TIME (MIN)
Apple pie	Single	Pastry Bake or Fan Bake	3	190-200	25-30
Lemon meringue	Single	Pastry Bake or Fan Bake	3	175-180	30-40
Baked cheesecake (in water bath)	Single	Classic Bake	3	160	50-60
Custard tart (blind bake, then add filling)	Single	Classic Bake	3	150-175	15-30
DESSERTS					
Crème brulee (in water bath)	Single	Classic Bake	3	135	35-45
Crème caramel (in water bath)	Single	Classic Bake	3	175	35-45

SAVOURY	SHELVES	FUNCTION	SHELF POSITION	TEMP (°C)	TIME (MIN)
MEAT PIES	Single	Pastry Bake or Fan Bake	3	190-195	30-40
SAUSAGE ROLLS	Single	Pastry Bake or Fan Bake	3	190-200	20-25
VEGETABLES	Single	Fan Bake	3	175-190	30-50
LASAGNE	Single	Fan Bake	3	175-190	35-45
CASSEROLES	Single	Slow Cook or Classic Bake	2	120-150	2-4 hr
PIZZA					
Classic	Single	Pizza	1 or 2	225-250	15-25
Thin crust	Single	Pizza	1 or 2	280	8-12
QUICHE (blind bake, then add filling)	Single	Pastry Bake or Fan Bake	3	180-200	30-40
POTATOES, WHOLE (baked)	Single	Bake	3	200	50-60
FRITTATA (shallow)	Single	Pastry Bake	3	170-180	15-20
OVEN MEALS	Single	Fan Forced	3	170-190	30-40

ROASTING	SHELVES	FUNCTION	SHELF POSITION	TEMP (°C)	TIME (MIN)	MEAT PROBE (°C)
BEEF, BONELESS (times per 450g)						
Rare	Single	Roast	2 or 3	160-170	18-32	54-59
Medium	Single	Roast	2 or 3	160-170	25-40	60-74
Well done	Single	Roast	2 or 3	160-170	30-55	74-79
PRIME RIB ROAST (times per 450g)						
Rare	Single	Roast	2 or 3	160-170	15-30	54-59
Medium	Single	Roast	2 or 3	160-170	20-35	60-74
Well done	Single	Roast	2 or 3	160-170	25-40	74-79
LAMB RACK						
Medium rare	Single	Roast	3	200	20	50
LAMB LEG, BONE IN (times per 450g)						
Medium	Single	Roast	2 or 3	160-170	18-28	65-70
Well done	Single	Roast	2 or 3	160-170	20-33	74-79
LAMB LEG, BONLESS (times per 450g)						
Medium	Single	Roast	2 or 3	160-170	20-35	65-70
Well done	Single	Roast	2 or 3	160-170	25-45	77-79
VEAL (times per 450g)						
Medium	Single	Roast	2 or 3	160-170	20-40	71
Well done	Single	Roast	2 or 3	160-170	25-45	76
CHICKEN, WHOLE (times per 450g, excl. butterflied)						
Unstuffed	Single	Fan Grill	2 or 3	175	15-20	75
Stuffed	Single	Bake	2 or 3	175	17-22	75
Butterflied	Single	Fan Grill	3 or 4	175	40-50	75
TURKEY, WHOLE (times per 450g)						
Stuffed	Single	Bake	1 or 2	160-170	17-22	75
Unstuffed	Single	Bake	1 or 2	150-165	15-20	75

ROASTING	SHELVES	FUNCTION	SHELF POSITION	TEMP (°C)	TIME (MIN)	MEAT PROBE (°C)
PORK, BONELESS (times per 450g)						
Medium	Single	Roast	2 or 3	170-175	25-40	63-68
Well done	Single	Roast	2 or 3	170-175	30-45	74-79
PORK CRACKLING						
Crisp (watch closely)	Single	Fan Grill	4	220	5-10	n/a
VENISON (times per 2.5cm thickness[1])						
Rare*	Single	Fan Grill	4	225	7	49-54
Medium*	Single	Fan Grill	4	225	9	55-60

[1] Brown in frying pan first.

COOKING CHARTS

GRILLING	SHELVES	FUNCTION	SHELF POSITION	TEMP (°C)	TIME (MIN)
BEEF					
Steak, rare	Single	Grill	6 or 7	HI	8-10
Steak, medium	Single	Grill	6 or 7	HI	10-15
Burgers	Single	Grill	6 or 7	HI	12-15
Meatballs	Single	Grill	6 or 7	HI	12-15
LAMB					
Chops, medium	Single	Grill	6 or 7	HI	15-20
Chops, well done	Single	Grill	6 or 7	HI	20-25
PORK					
Chops, well done	Single	Grill	6 or 7	HI	15-20
Ham steak	Single	Grill	6 or 7	HI	15-20
Bacon	Single	Grill	6 or 7	HI	4-7
CHICKEN					
Boneless pieces	Single	Fan Grill	6 or 7	175	30-40
Bone in pieces	Single	Fan Grill	6 or 7	175	40-50
SAUSAGES	Single	Grill	6 or 7	HI	10-15
FISH					
Fillets	Single	Fan Grill	6 or 7	200-220	8-12
Whole	Single	Fan Grill	6 or 7	200-220	15-20
VEGETABLES					
Sliced	Single	Grill	6 or 7	HI	8-12
BREAD					
Toast (10-15mm thick)	Single	Grill	5	HI	1-3

- You can use the timer at any time, even if you are not using the oven.
- If the time is more than an hour, the display will count down in minutes (h:m). If it is less than an hour, it will count down in seconds (m:s).
- You can set the timer for up to 23 hours 59 minutes.

IMPORTANT!

The timer does NOT turn the oven off.

To set the timer

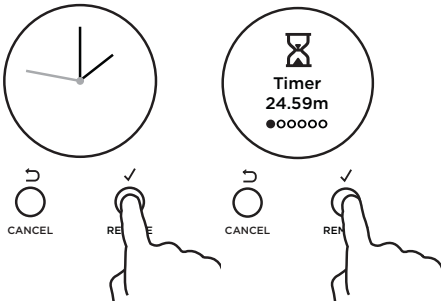

1 Press ✓ to to enter the main menu.

- The timer will be the first option.
- Press ✓ to enter the timer.

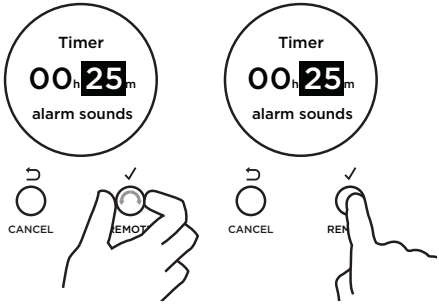

2 Scroll to set the minutes.

- Press ✓ to confirm.

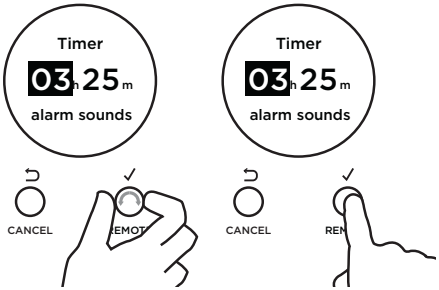

3 Scroll to set hours.

- Press ✓ to confirm.

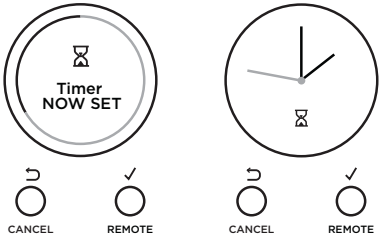

The timer is now set and will begin counting down. Press ⮌ or scroll to return to the time of day.

To edit the timer

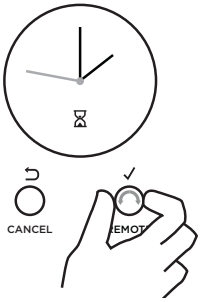



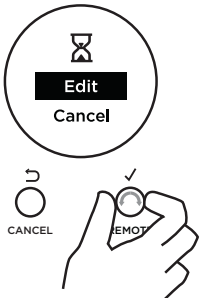

1 From the home screen, scroll to view the active timer.
2 Press ✓ to enter the timer.
3 Scroll to select Edit.
4 Press ✓ to confirm.
5 Follow the steps previous to adjust the timer.

To cancel the timer

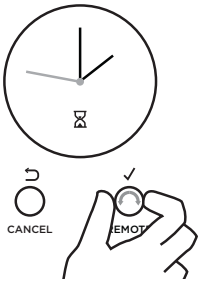



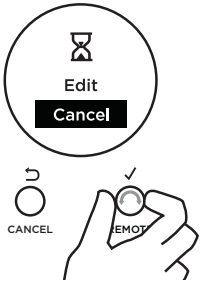

1 From the home screen, scroll to view the active timer. Press and hold **CANCEL** to cancel the timer, or follow the steps on the right.
2 Press ✓ to enter the timer.
3 Scroll to select Cancel.
4 Press ✓ to confirm and exit the menu.

When the set time is up

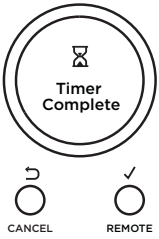

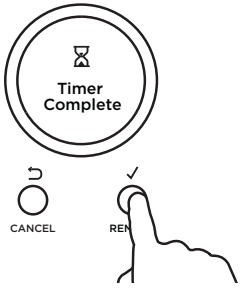

1 Timer Complete will appear and the display will flash. A tone will sound every few seconds.
2 Press ✓ or CANCEL to stop the tone sounding.

Use Auto Cook to

- Turn off the oven automatically after a set period of time.
- Set the oven for food to be ready at a specific time.

Before you start

- Make sure that your oven is displaying the correct time of day and food is in the oven.

IMPORTANT!

Safe food handling: leave food in the oven for as short as time as possible before and after cooking or defrosting. This is to avoid contamination by organisms which may cause food poisoning. Take particular care during warmer weather.

You can choose to either start cooking now or set a delayed cook.

- Choose Start Now if you have started cooking and want to set the oven to turn off automatically after a set period of time.
- Choose Delayed Cook to set the oven to automatically turn on later and be ready at a set time.

To set Auto Cook

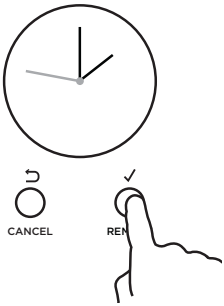

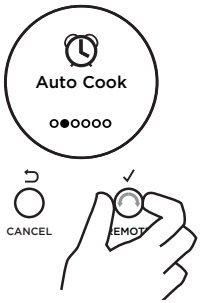

1 Press ✓ to enter the main menu.

2 Scroll through the menu options to Auto Cook.

- Press ✓ to enter Auto Cook.



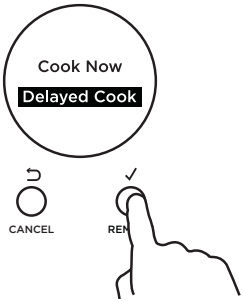

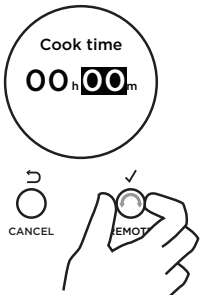

3 Scroll to choose between Cook Now and Delayed Cook.

- Press ✓ to accept.

4 Set the Cook time.

- Scroll to set the minutes.
- Press ✓ to accept.

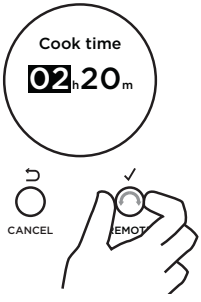

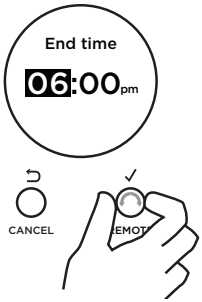

5 Scroll to set the hours.

- Press ✓ to accept.

Delayed Cook

To set Delayed Cook you will also need to set an End Time.

6 Scroll to set the minutes.

- Press ✓ to accept.

7 Scroll to set the hours.

- Press ✓ to accept

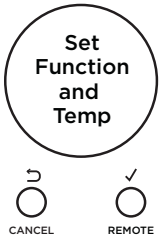

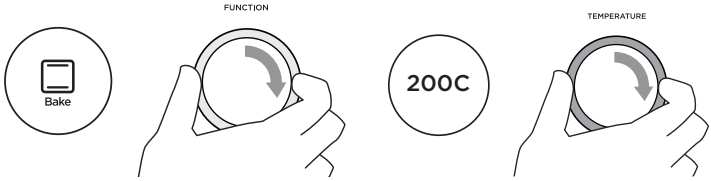

If you have not already set a function and temperature:

- Set Function and Temp will appear in the display.
- The halos on the oven dials will flash.



8 Set a function and temperature using the oven dials.

The display will show a summary of your settings, showing:

- Start time
- Cook time
- End time

9 Press ✓ to confirm or ⮌ to go back and adjust the settings.

Your oven is now set for automatic cooking.

When Auto Cook is set

- The oven and the lights will stay off, the halos will be unlit, but your oven is now set for automatic cooking. It will automatically turn on at the required time.
- You can modify the function and temperature while the oven is waiting to start cooking.
- If setting Delayed Cook you will need to put the food in the oven before starting.
- For safety reasons opening the door while the oven is waiting to start will cancel Delayed Cook.

While the oven is heating up

IMPORTANT!

- During Auto Cook the grill element will come on while the oven is heating up. Food placed into a cold oven could be prone to burning as the oven heats up.
- Large items and foods with a high fat or sugar content are especially prone to burning. Take particular care with foods such as macaroni cheese, large poultry, and enchiladas.
- Ideal foods for automatic cooking include stews, casseroles, braised meat and potato top pie.
- Position food on a lower shelf to prevent burning.
- Where possible cook food in a pan with a lid, or cover food with foil.

To edit Auto Cook

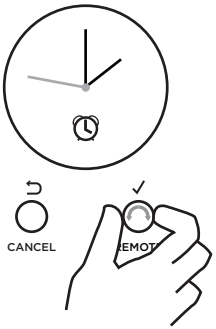

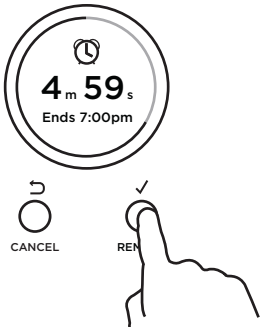

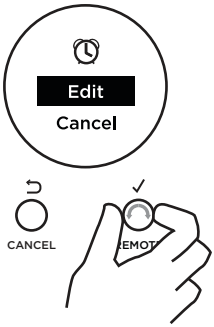

1. From the home screen, scroll to view Auto Cook.
2. Press ✓ to enter Auto Cook.
3. Scroll to select Edit.
4. Press ✓ to confirm.
5. Follow the steps previous to adjust the Cook or End time.

To cancel Auto Cook

1 From the home screen, scroll to view the active timer.

- Press and hold CANCEL to cancel Auto Cook, or follow the steps below.
- Turning both dials to **O** (OFF) will also cancel Auto Cook.

2 Press ✓ to enter Auto Cook.

3 Scroll to select Cancel.

4 Press ✓ to confirm.

When the set time is up

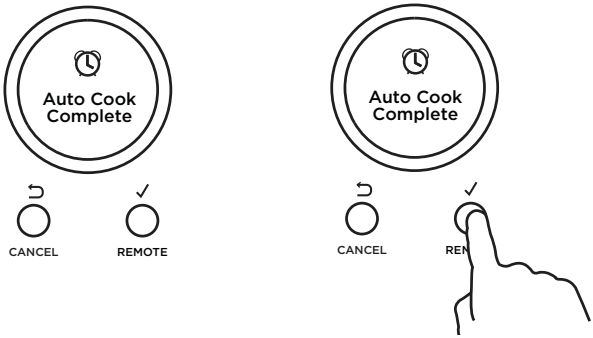

1 Auto Cook Complete will appear and the display will flash.

- A tone will sound every few seconds.

2 Press ✓ or CANCEL to stop the tone sounding.

3 Turn both the oven dials back to **O** (OFF).

IMPORTANT!

- If fitted, remove all shelving before using the rotisserie.
- Slide the step-down wire rack into shelf position 1 and place the roasting dish on top of this, to catch the drippings of the rotating meat.

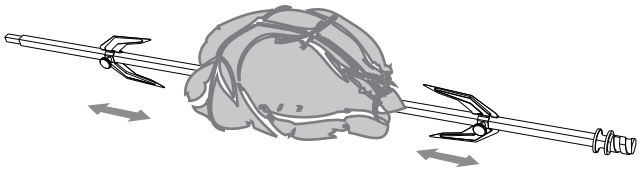

1 Secure the meat onto the rotisserie skewer.

IMPORTANT!

- Take care, the forks are sharp!
- Slide one fork on to the skewer (prongs facing inward) and tighten the fastening screw to secure in place. Carefully slide the meat onto the skewer until it rests firmly against the fork.
- Fit the second fork, ensuring the meat is held firmly in place. Tighten the fastening screw to secure.
-

When securing the meat, ensure that:

- The skewer goes through the centre of the meat.
- The forks hold the meat firmly in place.
- There are no loose or projecting parts. Poultry should be trussed.
- Note: the rotisserie can rotate up to 6 kg of meat and is long enough to cook two chickens at the same time.

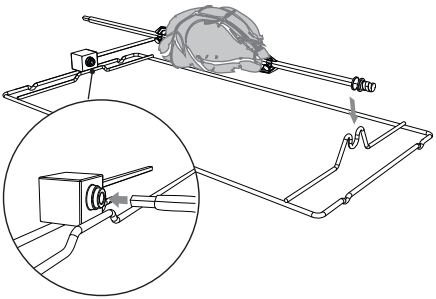

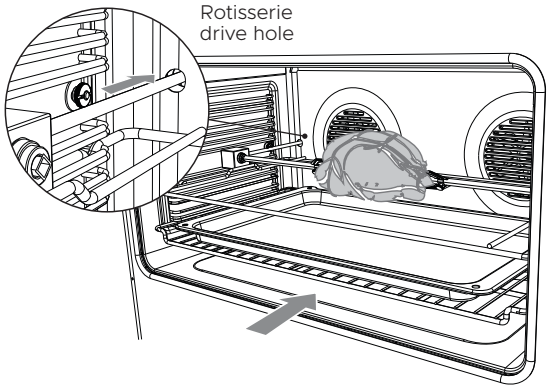

2 Position the skewer on the supports.

- Place the skewer on the supports, and check that the meat does not touch the roasting dish.

3 Place the rotisserie in the oven.

- Insert the drive rod into the rotisserie drive hole (back wall of oven).
- Ensure the skewer is properly located on the supports.

Select the Rotisserie function

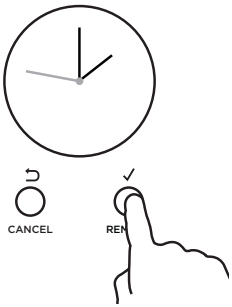

1 Press ✓ to enter the main menu.

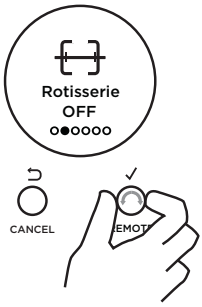

2 Scroll through the menu options to get to Rotisserie.

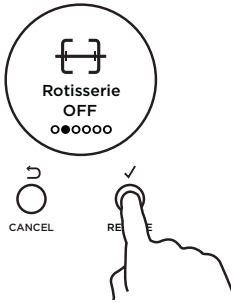

3 Press ✓ to enter the Rotisserie menu.

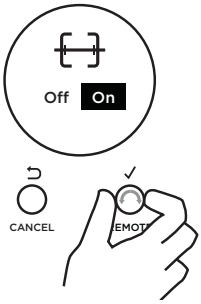

4 Scroll through the Rotisserie options to ON.

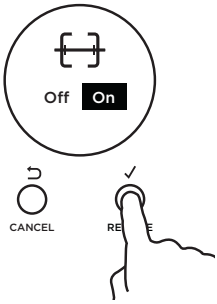

5 Press ✓ to confirm.

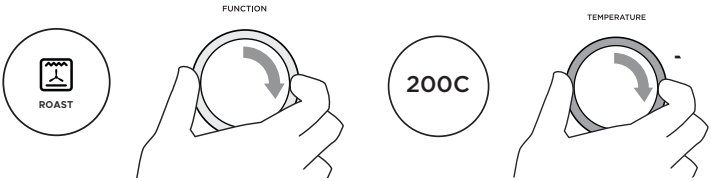

6 Set the function and temperature.

- We recommend using the Roast function for perfect results.
- The rotisserie will start to rotate.

IMPORTANT!

- Always turn the oven dials to O (OFF) before removing the rotisserie.
- Always ensure that poultry is cooked thoroughly.
- During use, the rotisserie components become hot. If you leave the oven door open after using the rotisserie, parts of the control panel may also become hot. Use oven mitts and take extra care, especially when removing both the meat and rotisserie parts.

LOCKING THE OVEN CONTROLS

This function is to prevent accidental use of the oven (eg by children). When locked, the controls are unresponsive and the oven will not turn on.

IMPORTANT!

- This does not lock the cooktop controls.
- For safety reasons it is not possible to lock the oven controls while the oven is in use or if Auto Cook has been set.

To lock:

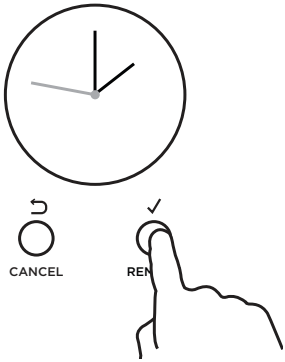

1 Press ✓ to enter the main menu.

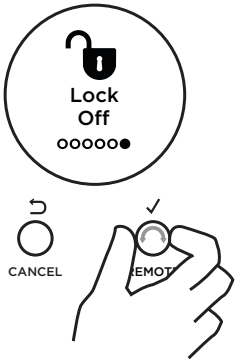

2 Scroll through the menu options to get to Lock.

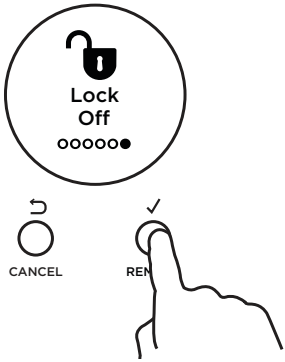

3 Press ✓ to enter the Lock menu.

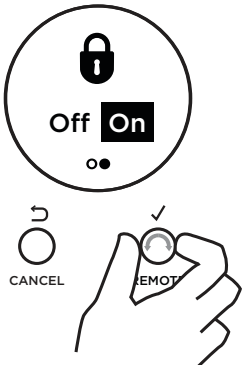

4 Scroll through the Lock options to ON.

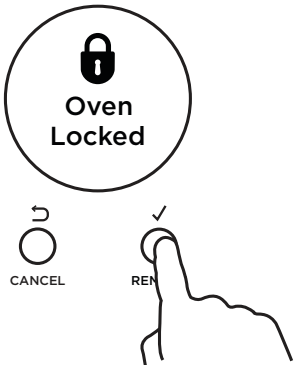

5 Press ✓ to confirm.

- The control panel is now locked.

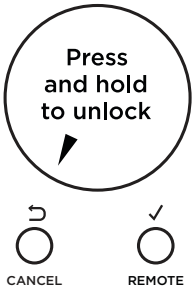

To unlock:

- Press and hold CANCEL to unlock the oven controls.

Adjust the user settings to suit your personal setup preferences.

You can set your oven to:

- display the temperature in degrees Celsius or Fahrenheit
- give audio feedback (tones and beeps) or operate quietly
- display time as 12-hr or 24-hr
- operate with the display off
- have its lights on or off during cooking
- operate in Sabbath Mode (see 'Sabbath Mode' following).

Note: you cannot change the user preference settings when you oven is operating or set for automatic cooking.

How to change preference settings

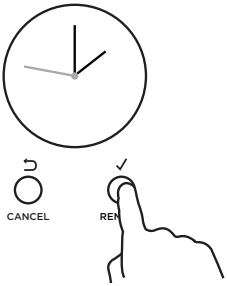

1 From the home screen, press ✓ to enter the main menu.

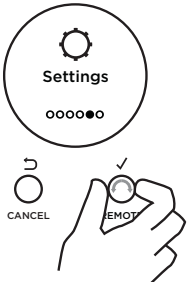

2 Scroll through the menu options to settings.

- Press ✓ to enter the settings menu.

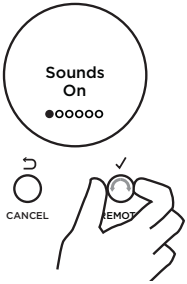

3 Scroll to the setting you want to change.

- Press ✓ to edit the setting.

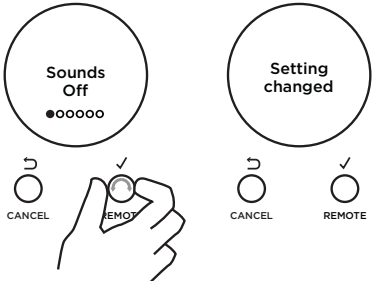

4 Scroll between the options for each setting. Refer to the table following for which options are available.

- Press ✓ to confirm.

5 The display will confirm that you have changed the setting.

USER PREFERENCE SETTINGS

SETTING	DEFAULT OPTION	ALTERNATIVE OPTION(S)		
CLOCK DISPLAY **Select between:** • **Analog and digital display** • **12-hr and 24-hr display** • **Display off**** **Turn the display off if you only want to use the basic functionalities of your oven.**	**ANALOG** 	**24H** 24:00	**12H** 12:00	**DISPLAY OFF**** Clock display Off
TEMPERATURE SCALE **Select between degrees Celsius or Fahrenheit.**	**CELSIUS** Degrees Celsius	**FAHRENHEIT** Degrees Fahrenheit		
AUDIO FEEDBACK **Turn the oven beeps and tones on or off.***	**ON*** Sounds On	**OFF*** Sounds Off		
OVEN LIGHTS **Have the light off during cooking if you want to save power or want the food you cook to be a surprise for others.**	**ON** Lights On	**OFF** Lights OFF		
SABBATH MODE	**OFF** Sabbath Off	See ‘Sabbath Mode’ for instructions.		
LANGUAGE **Choose the language you would like the oven to display in.**	**UK ENGLISH** UK English	**US ENGLISH** US English	**SPANISH** Espanol	**FRENCH** Francaise
WIRELESS CONNECTION **Not available on this product.**	**OFF** OFF			
USER SETTINGS RESET **Use this to clear all changes to settings and reset to the factory settings.**	**RESET** Reset	Select this option and accept to reset all user settings.		

*The timer tone and alert beeps will sound even if you save the SOUNDS OFF option.

**With this option saved, you can still use the oven, and timer, however the display will remain unlit. Any automatic functions will be cancelled when this option is selected. To quit this option and enable the display, press and hold CANCEL.

SABBATH MODE

This setting is designed for religious faiths that observe a ‘no work’ requirement on the Sabbath.

While your oven is in Sabbath Mode

- The display, dial halos and indicators will be unlit, the controls will be unresponsive.
- No tones or beeps will sound.
- No alert codes or temperature changes will be displayed.
- The oven lights will stay on. If you want the oven lights to be off during Sabbath Mode, first select the ‘Lights off’ option as described in ‘User preference settings’, and then set Sabbath Mode afterwards.
- Bake is the only function available in Sabbath Mode.

How to set Sabbath Mode

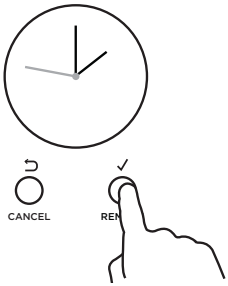

1 From the home screen, press ✓ to enter the main menu.

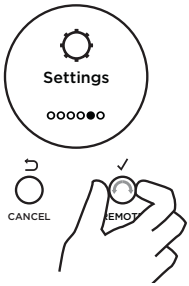

2 Scroll through the menu options to settings.

- Press ✓ to enter the settings menu.



3 Scroll through the menu options to Sabbath Mode.

- Press ✓ to enter the Sabbath Mode setting.

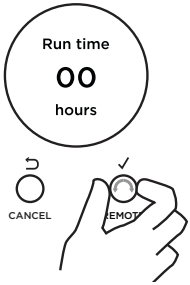

4 Scroll to set the time. You may set the time up to 48 hours.

- Press ✓ to confirm.

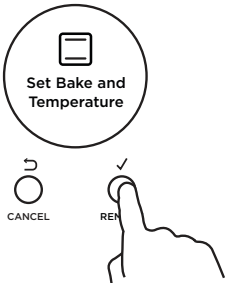

5 Select the Bake function.

6 Set the desired temperature.

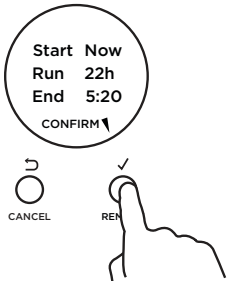

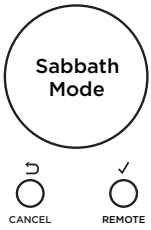

The display will show a summmary of your settings, showing:

- Start time
- Run time
- End time

7 Press ✓ to confirm or ↩ to go back and adjust the settings.

The display, indicators and dial halos will be unlit and unresponsive, but the oven will bake until you quit Sabbath Mode.

To quit Sabbath Mode

Press and hold CANCEL until the time of day appears in the display, or turn either oven dial back to **O** (OFF).

OR90 models – cooktop

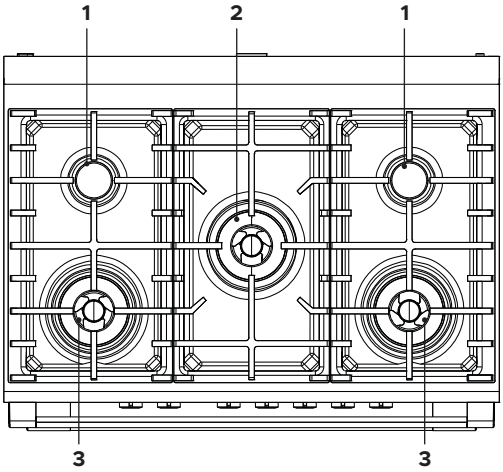

Cooktop features	
1	Semi-rapid burner
2	Dual wok burner
3	Triple-ring burner

Using the dual wok burners

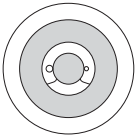

Inner and outer burners

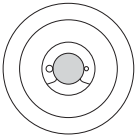

Inner burner only

When using a dual wok burner, you can choose to use the inner burner only or both the inner and outer burners as desired.

The lowest burner setting on the range is the inner ring of the dual wok burner. This can be used for delicate simmering or the melting of chocolate.

Flame failure protection

Your cooktop is equipped with flame failure protection: the gas supply will automatically be cut off to a burner that is accidently blown out by a draught or extinguished by a spill.

Burner Controls

The dials control the flow of gas through the valve.

Using the single burners

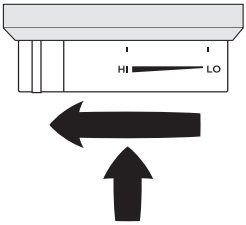

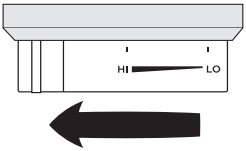

1 Identify the dial of the burner you want to use.

2 Starting from the **O** (OFF) position, push the dial in and turn it anticlockwise to **HI**.

- The ignitor on the burner will spark.

3 After the burner has lit keep the dial held in for a few more seconds before releasing.

- Releasing the dial too soon will extinguish the flame.

4 When the burner has lit, adjust the flame anywhere between **HI** and **LO**.

- Do not adjust the dial between HI and **O** (OFF).

5 When you have finished cooking, turn the clockwise back to **O** (OFF).

- If you are using LP gas, there may be a slight 'extinction pop' or flash at the flame spreader a few seconds after the burner has been turned off. This is normal for LP gas.

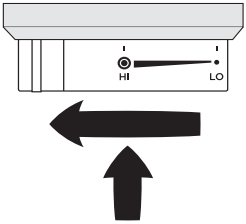

Using the dual burner

6 Starting from the **O** (OFF) position, push the dial in and turn it anti-clockwise to either HI ◉ to light both the inner and outer rings or **HI** ◉ to light the inner ring only.

If a burner does not light

Turn the control dial to **O** (OFF) and wait at least one minute before trying again, to all the gas to disperse.

If the burner still does not light, check that:

- the cooker is plugged in and the power supply is switched on
- there is no power failure in your home or neighborhood
- the gas is turned on
- the gas bottle is not empty (if you use bottled gas)
- the flame spreaders are clean and the holes are not clogged
- the ignitors are sparking. If they are not sparking, they may be dirty or wet. Clean them with a toothbrush and methylated spirits, as shown below.
  See 'Care and cleaning' for instructions on removing and replacing the burner parts.

Cleaning the ignitor & probe

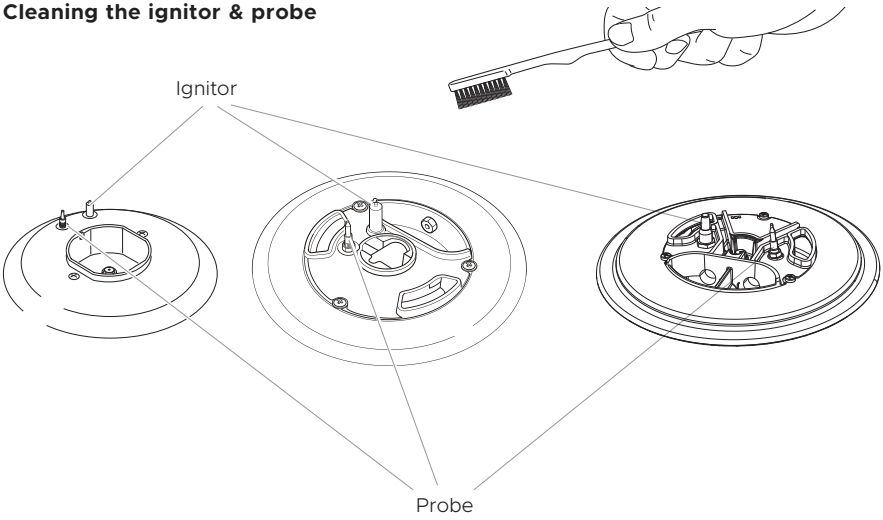

If the flame is irregular, check that the burner parts (flame spreader and burner cap) are:

- clean and dry
- positioned correctly, as shown below.
- For further advice, see sections 'Care and cleaning' and 'Troubleshooting'.

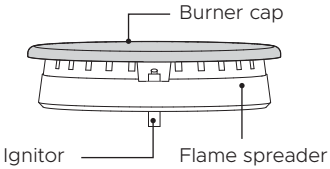

Burner parts

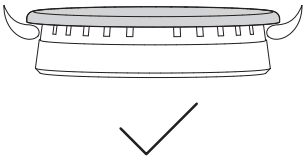

Correct assembly of burner parts

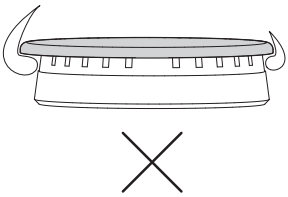

Incorrect assembly of burner parts, resulting in irregular flames

Cooking guidelines

IMPORTANT!

- Never leave the cooktop unattended when in use. Boilover causes smoking and greasy spills that may ignite.
- Take care when deep-frying: oil or fat can overheat very quickly, particularly on a high setting.
- Start cooking on a high setting. When food comes to the boil, reduce the setting and maintain a steady heat to cook your food thoroughly. Doing this will reduce the cooking time.
- Using a lid will reduce cooking times through retaining the heat.
- Minimise the amount of liquid or fat to reduce cooking times.
- For simmering, the recommended burner to use is the semi-rapid burner at the rear of the cooktop or the inner ring of the dual wok burner at the front of the cooktop. Use for delicate cooking such as melting chocolate.
- For maximum power, the recommended burner to use is the triple ring burner in the centre of the cooktop or the full dual wok burner at the front of the cookop. Use for heat-intensive cooking such as searing meat.
- Use the lowest setting on the dual wok burner to maintain low heat for turn down and simmering.

Cookware

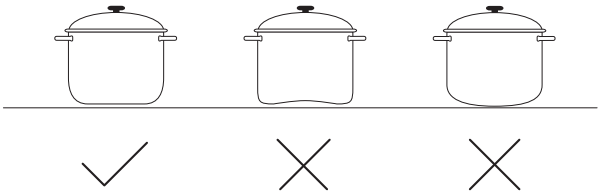

- Use saucepans with thick flat bases. Food in a saucepan with an uneven base will take longer to cook.
- Do not let large saucepans or frying pans overlap the bench, as this can deflect heat onto your benchtop and damage its surface.
- Always make sure saucepans are stable. Using very heavy saucepans may bend the pan supports or deflect the flame.
- Make sure the size of the pan matches the size of the burner. A small pot on a large burner is not efficient.
  The following table shows the minimum and maximum saucepan base diameters that may be used on each burner:

BURNER	MINIMUM DIAMETER	MAXIMUM DIAMETER
Semi-rapid	16cm	24cm
Triple-ring wok	26cm	28cm
	Maximum diameter for woks 36cm	
Dual (inner crown only)	12cm	14cm
Dual (inner and outer crowns)	26cm	28cm
	Maximum diameter for woks 36cm	

Wok stand

The wok stand fits over the triple-ring wok or dual burner trivet.

IMPORTANT!

- Using a wok without the stand may cause the wok to tip or the wok or dual burner to operate incorrectly.
- Do not use the stand for ordinary, flat-bottomed saucepans.
- The wok stand MUST ONLY BE PLACED over the trivet for the triple-ring wok or dual burner.
- The cooktop becomes very hot during operation. Keep children well out of reach.

Correct placement of wok stand

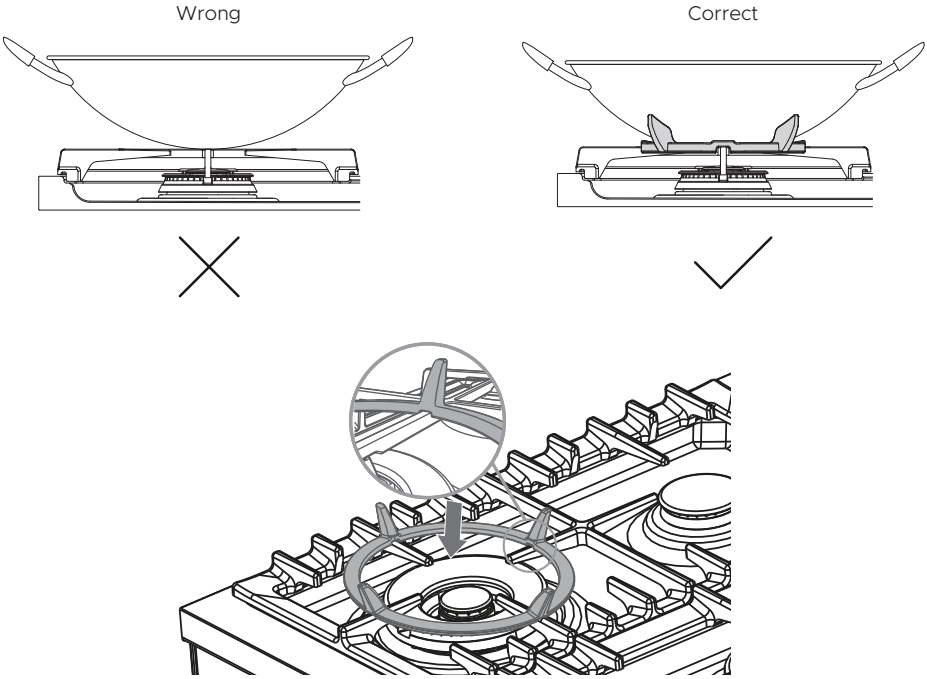

USING THE WARMING DRAWER

Use the warming drawer to keep food warm after you have finished cooking and to warm plates before serving. The warming drawer will keep hot cooked foods at serving temperature.

- Allow time for the drawer to preheat.
- Place hot food in a heatproof pan or serving dish.
- Take care when opening the drawer. Position your hand at the bottom of the drawer and open slowly to allow hot air and steam to escape.
- Take care not to touch the inside surfaces of the drawer while it is hot.
- When using the drawer to warm plates ensure the temperature is only set to **LO**. Ensure plates are evenly spread out.
- Do not stack dishes or plates as this may result in uneven heating.

To use the warming drawer

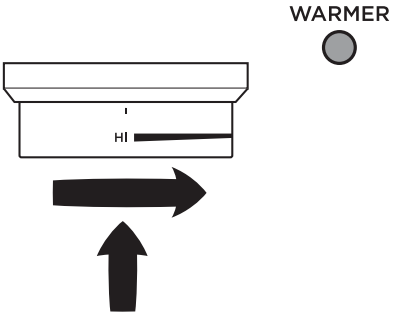

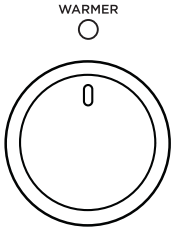

1 Push in the warmer dial and turn clockwise to **HI**.

- While the drawer is on the indicator will glow red.

2 When you have finished using the drawer turn the dial back to **O** (OFF).

- The indicator will go out.

Warmer dial

- The temperature can be set anywhere between **LO** (minimum) and **HI** (maximum).
- The warming drawer is fitted with an heating element in the top.
- See the table on the right for the temperature settings.

DIAL POSITION	°C
LO	30
HI	75

IMPORTANT!

- Do not use the drawer to reheat food.
- Do not place food in the drawer in unopened containers. Built up pressure could cause the container to burst.
- Do not use plastic containers.
- Use dry potholders to transfer dishes to and from the drawer. Take care not to let potholders touch the hot upper element.
- Do not store flammable items in the drawer.
- Do not use the warmer drawer as a storage drawer.
- Do not use aluminum foil to line the drawer.
- Make sure the dial is always set to O (OFF) when running a self clean cycle and any time when the drawer is not in use.

DOS

- Read these cleaning instructions and the 'Safety and warnings' section before you start cleaning your cooker.
- Before cleaning or removing any part, make sure that everything on the cooker has been turned off.
- Unless suggested otherwise in the chart following, allow any part to cool to a safe temperature before cleaning. If you do need to handle a warm or hot part, take extreme care. Wear long protective mitts to avoid burns from steam or hot surfaces.
- Try using any cleaner on a small area first, to ensure it doesn't stain.
- See the pages following this chart for instructions on removing and replacing different parts of the cooker for cleaning or maintenance.
- To help you identify any parts, see illustrations in section 'Introduction' and after this cleaning chart.
- Ensure the anti-tip device is re-engaged if you move the cooker for cleaning. Failure to do this may result in the oven tipping, and adults and children may be killed.
- To prevent soiling from becoming 'baked on' and stubborn, we recommend removing any easy-to-reach spills, food or grease stains from the oven cavity enamel after each use.
- Always clean the inner glass pane before starting a Self Clean cycle. Failure to do this will mean that residue will bake on and be impossible to remove.
- Always remove oven shelves before starting a Self Clean cycle.

DON'TS

- Do not use aerosol cleaners until the cooker has completely cooled. The propellant substance in these cleaners could catch fire in the presence of heat.
- Do not let soiling or grease accumulate anywhere in or on the cooker. This will make future cleaning more difficult and may present a fire hazard.
- Do not use any abrasive or harsh cleaners, cloths, scouring pads or steel wool. These will scratch your cooker and damage its appearance.
- Do not use a steam cleaner to clean any part of the cooker.
- Do not perform any cleaning or maintenance on parts not specifically named in the chart below. If in doubt, contact Customer Care.
- Only a Fisher & Paykel trained and supported service technician can take apart the door.
- Do not attempt to take the door apart for cleaning. If the inner panes of glass in the door become dirty, please contact your Fisher & Paykel trained and supported service technician or Customer Care.

Manual cleaning chart

WHAT?	HOW?	IMPORTANT!
COOKER EXTERIOR		
Door frame exterior, Control panel, Cooktop base Back trim Warming drawer exterior After every use	**1** Soften any stubborn stains under a hot soapy cloth. **2** Clean with a solution of mild detergent and hot water, then wipe dry with a microfibre cloth.. **Stainless steel models:** For extra shine, use a suitable stainless steel cleaner and polish, following manufacturer's instructions. Always rub the stainless steel in the direction of the polish lines.	• Always read the label to make sure your stainless steel cleaner does not contain chlorine compounds as these are corrosive and may damage the appearance of your cooktop. • Do not use and take care not to spill any stainless steel cleaner on the dials, oven handles, or the kickstrip grate. These are not stainless steel parts and their surface may be damaged by stainless steel cleaner.
Dials Oven handles	**1** Wipe with a damp cloth using a solution of mild detergent and hot water. **2** Dry thoroughly with microfiber cloth.	• Do not use stainless steel cleaner on these parts, as doing so may damage their coating.
Clock	Take particular care when cleaning the clock and surrounding area. Only use a damp cloth with detergent.	• Do not use any oven cleaners, harsh or abrasive cleaners, scouring pads, steel wool or sharp metal scrapers on the glass. These may scratch and damage the surface.
Oven door glass (exterior)	Clean using a soft cloth and a mixture of warm water and dishwashing liquid or glass cleaner.	

Manual cleaning chart

WHAT?	HOW?	IMPORTANT!
OVEN PARTS		
Enamel oven interior – light soiling	**1** Wipe with a damp cloth and a solution of hot water and mild detergent. **2** Wipe dry with a soft cloth. Note: the oven door may be removed to make reaching into the oven easier.	• To prevent soiling from becoming 'baked on' and stubborn, we recommend removing any easy-to-reach spills, food or greasy stains from the enamel after each use. Doing so will reduce the need for using the Self Clean function frequently.
Enamel oven interior – stubborn, 'baked-on' soiling	Run the Self Clean cycle. See 'Using the Self Clean function' for instructions.	• Oven cleaners are caustic and may permanently stain or damage some surfaces. • When using, take care not to let it come in contact with any surface other than the oven interior. If it accidentally does, remove immediately.
Side racks	For light soiling: • Clean with a solution of mild detergent and hot water. For heavy soiling: • Run a Self Clean cycle.	
Oven shelves	Wipe with a damp cloth and mild detergent. Do not wipe off or wash away the white lubricating grease (visible when the shelf is extended).	• Never leave in the oven during a Self Clean cycle. • Do not wash the shelf in the dishwasher, immerse in soapy water, or use oven cleaner on it. Doing so will prevent the slides from running smoothly.
Roasting dish and grill rack **Rotisserie parts**	**1** Pre-soak any stubborn soiling in a solution of mild detergent and hot water. **2** Wash by hand or in a dishwasher.	• Never leave any of these parts in the oven during a Self Clean cycle. They will become discoloured or damaged.
Bake and grill burners	Do not clean these parts. They self-clean during normal use.	
OVEN PARTS		

Manual cleaning chart

WHAT?	HOW?	IMPORTANT!
Oven door glass (interior) After every use	• Use a soft cloth and a mixture of warm water and dishwashing liquid to remove light soiling after every use. • For stubborn stains, try using a mixture of baking soda and warm water with a non-abrasive scrubbing pad, then wipe dry with a soft, lint-free cloth.	• Do not use oven cleaners or any other harsh/abrasive cleaners, cloths, scouring pads, steel wool or sharp metal scrapers to clean the oven door glass. These scratch the glass, which in turn could result in the glass cracking and shattering. • Do not allow grease to build up on the glass or become baked on as this reduces visibility into the oven. • Only a Fisher & Paykel trained and supported service technician can take apart the door. • Do not attempt to take the door apart for cleaning. If the inner panes of glass in the door become dirty, please contact your Fisher & Paykel trained and supported service technician or Customer Care.
Oven door gasket	Avoid cleaning this part. If you need to remove large food particles off it, proceed as follows **1** Dampen a sponge with clean hot water. **2** Gently wipe off the soiling, but do not rub. **3** Press a dry towel gently on the gasket to dry.	• Do not use any cleaning agent on the gasket. • The gasket is essential for a good seal. Take care not to rub, displace, or damage it.
Warming drawer (interior)	**1** Wipe with a damp cloth and a solution of hot water and mild detergent. **2** Wipe dry with a soft cloth. Note: the drawer may be removed to make cleaning easier.	• To prevent soiling from becoming 'baked on' and stubborn, we recommend removing any easy-to-reach spills, food or greasy stains from the enamel after each use.
Drip tray under door	**1** Remove oven door. **2** Wipe with a damp cloth and a solution of hot water and mild detergent.	

Manual cleaning chart

WHAT?	HOW?	IMPORTANT!
COOKTOP PARTS		
Aluminum and enamelled burner caps and flame spreaders	**1** Check that the burner is turned OFF and allow it to cool. **2** Lift off the burner cap and brass flame spreader. **3** Wash them in hot soapy water, rinse, and dry. • Use a stiff nylon brush or straight-ended paper clip to clear the notches of the flame spreader. **4** Replace the flame spreader and burner cap correctly. See 'Replacing the burner parts'. **Brass burner parts only:** For extra shine and to remove tarnish use a suitable brass cleaner and polish, following manufacturer's instructions.	• Keep the notches of the flame spreaders clear. Soiling may clog these and cause ignition problems. • Before replacing the burner parts, check that they are dry. Wet burner parts may result in an irregular flame. • Before lighting a burner you have reassembled, check that all of its parts are positioned correctly. Incorrect assembly can cause dangerous irregular flames and ignition problems. • Do not put any burner parts in the dishwasher as they will become discoloured.
Ignitors	**1** Check that the burner is turned OFF. **2** Clean the ignitor with a small brush (eg old toothbrush) or cotton swab that has been dipped into rubbing alcohol.	• The ignitors must be kept clean and dry to work correctly. Dirty or wet ignitors could cause constant clicking and sparking, even if a flame is present.
Burner grates	**1** Wait until the grates have cooled completely. **2** Carefully lift the grates off the cooktop and place them on a protected surface. **3** To remove stubborn stains, soak the grates in a mixture of clothes washing detergent and water. **4** Wash in a mixture of hot water and dishwashing liquid, then rinse and allow to dry. • The grates are also dishwasher-safe.	• Take care, the grates are heavy. • Make sure you place a dish towel or other soft cover on the surface before putting a grate on it.
Wok ring	**1** To remove stubborn stains, soak the grates in a mixture of clothes washing detergent and water. **2** Wash in a mixture of hot water and dishwashing liquid, then rinse and allow to dry. • The wok ring is also dishwasher-safe.	

Removing and replacing the oven door

IMPORTANT!

- Switch the oven off at the wall before removing the door.
- Do not lift the oven door by its handle. Doing so may damage the door.
- Make sure the oven and the door are cool before you begin to remove the door.
- Before removing the door, make sure there is a large enough clear, protected surface in the kitchen to rest the door on.
- Take care, the oven door is heavy!

To remove the oven door

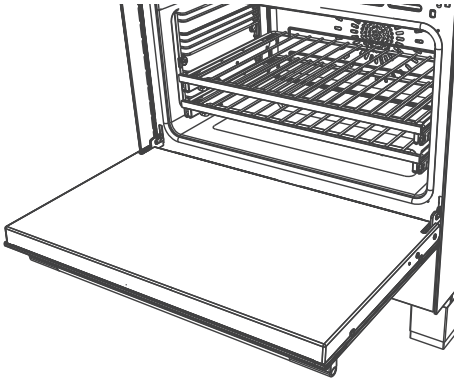

1 Open the door fully.

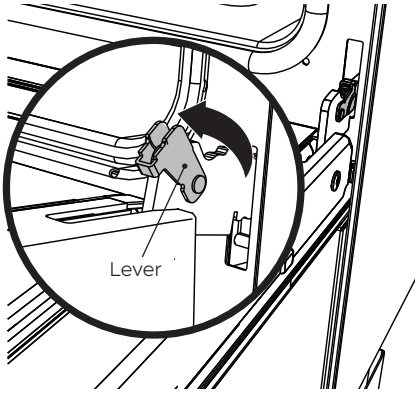

2 Open the levers fully on both sides.

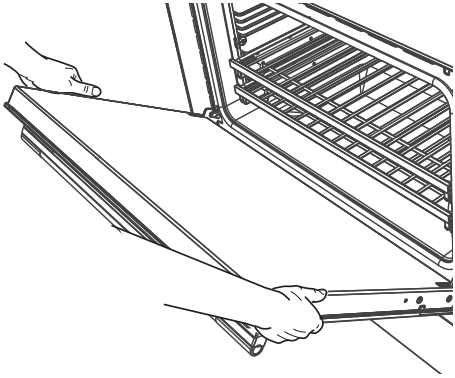

3 Holding the door firmly on both sides, gently close it about halfway.

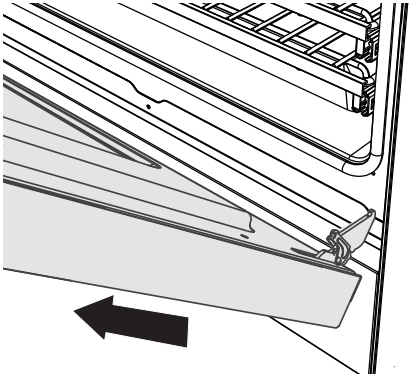

4 Disengage the hinges and remove the door. Place on a protected surface.

To replace the oven door

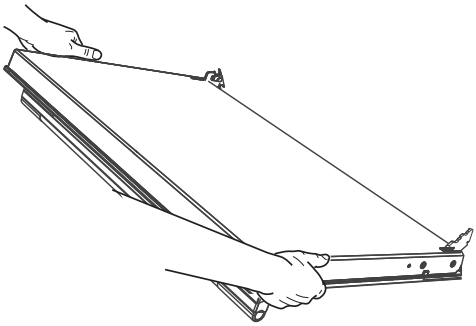

1 Hold the door firmly in an approximately halfway open position.

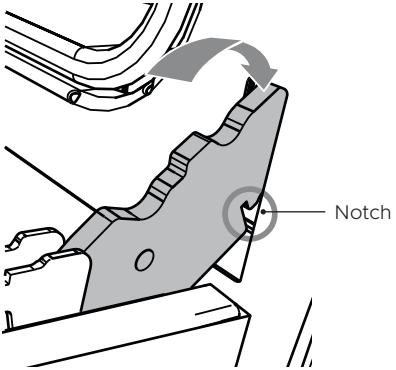

2 Insert the hinge tongues into the slots, making sure that the notches on both sides drop into place as shown.

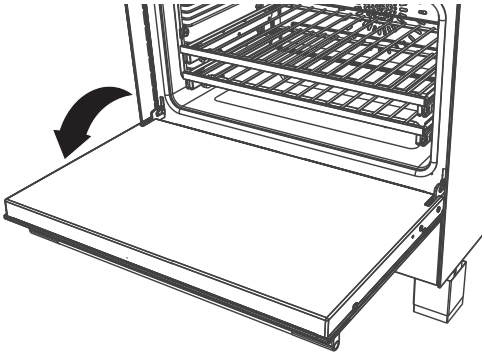

3 Open the door fully.

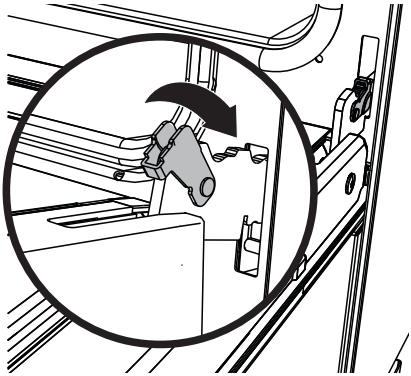

4 Fully close the levers on the left and right hinges, as shown, then close the door.

Removing and replacing the oven side racks

IMPORTANT!

Always turn off the cooker at the wall first. Ensure the oven has cooled down completely before starting.

Remove all shelves

1 Slide out all shelves and remove. For easier access we recommend removing the oven door, see 'Removing and replacing the oven door'.

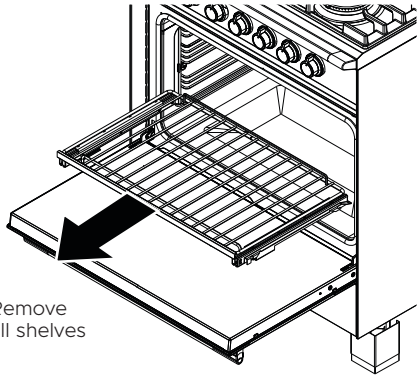

Remove all shelves

To remove the side racks

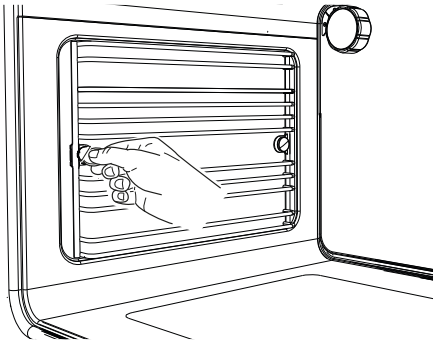

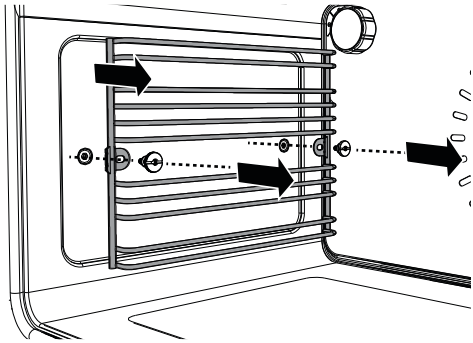

2 Use a small coin or a flat-head screwdriver to loosen and remove the fixing screws.

3 Remove the side racks

To replace the side racks

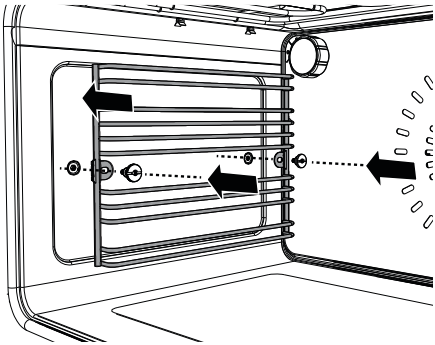

1 Make sure the side racks are the right way up, as shown.

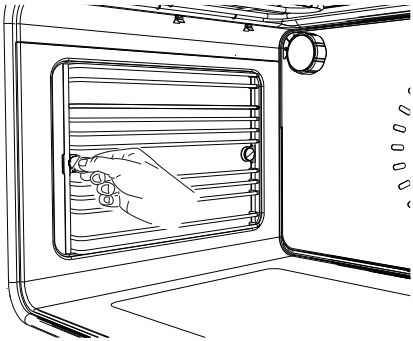

2 Refit the fixing screws and tighten.

Removing and replacing the warming drawer

IMPORTANT!

- Always turn off the cooker at the wall first.
- Ensure the oven and warming drawer have cooled down completely before starting.
- Ensure the drawer is completely empty before removing it.
- Always position your hand at the bottom of the drawer to open and close it.

To remove the warming drawer

1 Open the drawer completely.

2 Open the levers fully on both sides and hold in place:

- On the left side push the lever down
- On the right side push the lever up

3 Remove the drawer while holding the levers in position.

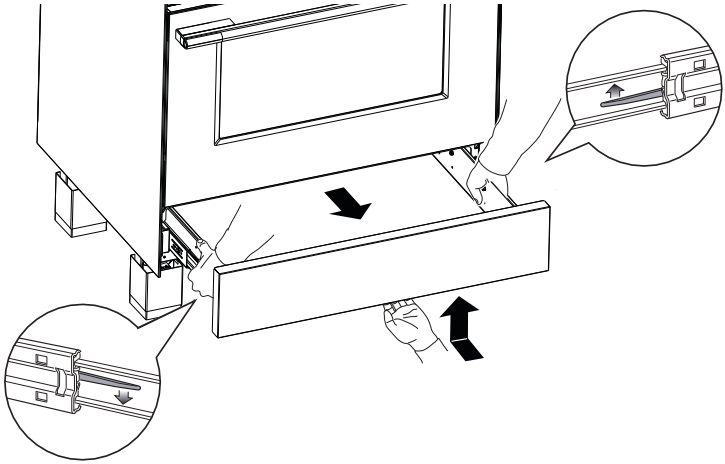

Fitting the storage drawer

1 Insert the drawer guides onto the sliding runners on either side of the cooker interior.

- Make sure they are correctly lined up on both sides of the drawer.

2 Gently close the drawer completely. The safety catches will automatically hook into place.

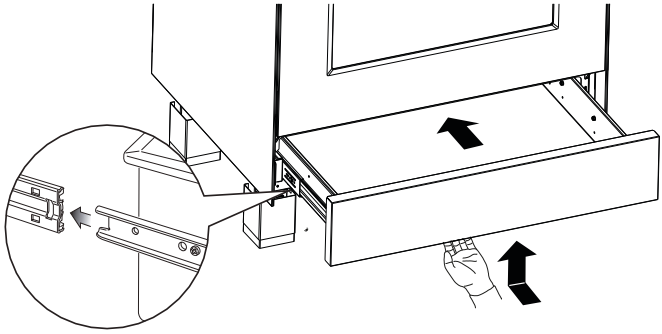

Burner parts

- You can remove and clean these parts with hot soapy water or non-abrasive detergents. Clean spills regularly before they become burnt on. Do not wash these parts in a dishwasher.
- After cleaning, check that the burners and their flame spreaders are dry before replacing correctly.
- It is very important to check that the burner flame spreader and the cap have been correctly positioned. Failure to do so can cause serious problems.
- Check that the ignitor is always clean to ensure trouble free sparking. It must be cleaned very carefully using a toothbrush and methylated spirits.
- Note: to avoid damage to the electronic ignition, do not try to light a burner without all burner parts in place.

Replacing the burner parts

- Carefully replace the burner parts as per the following illustrations.
- Fit the flame spreader to the housing as shown below. Make sure the burner is not able to rotate.

Check that:

- The ignitor is always clean to ensure trouble-free sparking.
- The probe is always clean to ensure correct operation of the safety valves.
- The flame spreaders are clean and the holes are not clogged.
- Note: both the ignitor and probe must be very carefully cleaned using a toothbrush and methylated spirits.

Replacing the semi-rapid burners

Correct positioning of burner parts

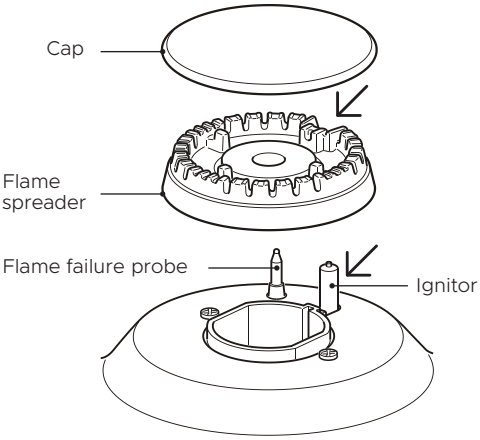

Replacing the semi-rapid burner caps

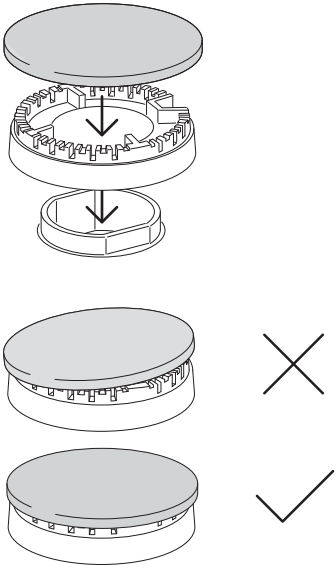

Replacing the triple-ring wok and dual burners

Correct positioning of flame spreader – triple-ring wok burner

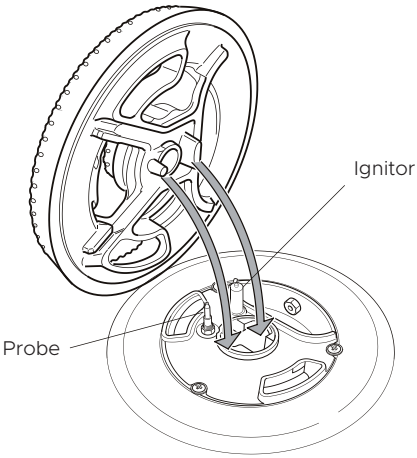

Correct positioning of flame spreader – dual burner

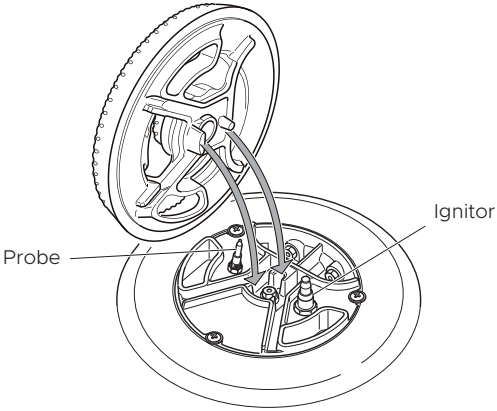

Correct positioning of cap and ring – triple-ring wok and dual burner

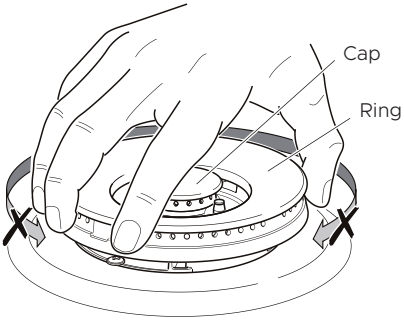

Incorrect and correct positioning of cap and ring – triple-ring wok and dual burner

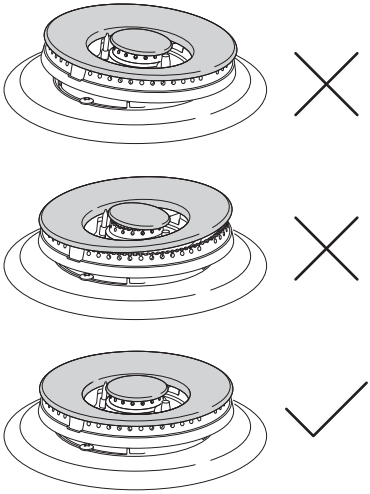

Replacing an oven light bulb

IMPORTANT!

Use a 25W, 220-240V 50Hz G9 halogen bulb for replacement.
Do not use a standard light bulb in any oven, the heat will break it.

1 Allow the oven (including the lamp cover and the bulb) to cool completely.
2 Remove any shelves that may get in the way.
3 Remove the door if the lamp will be hard to reach.
4 Turn the power supply to the cooker off at the main fuse or circuit breaker panel. If you don't know how to do this, contact an electrician.

IMPORTANT!

Failure to disconnect the cooker from the power supply may result in death or electrical shock.

5 Remove the lamp cover.

- Upper lights: wearing a rubber glove to improve grip turn the cover anticlockwise to unscrew.
- Side lights: wearing a rubber glove to improve grip, hold the cover and prise out using finger nails on other hand. If this does not work place a thin plastic spatula between the cover and cavity wall and gently twist to prise the cover off. Take care not to chip the glass covers or to damage the enamel finish inside the oven.

6 Remove the faulty bulb.
7 Holding the replacement bulb in a soft cloth or tissue insert it into the socket. Do not touch the bulb with your fingers.
8 Replace the lamp cover.

- Upper lights: turn the cover clockwise to tighten and then back a quarter turn

9 Turn the power supply to the cooker back on at the main fuse or circuit breaker panel.

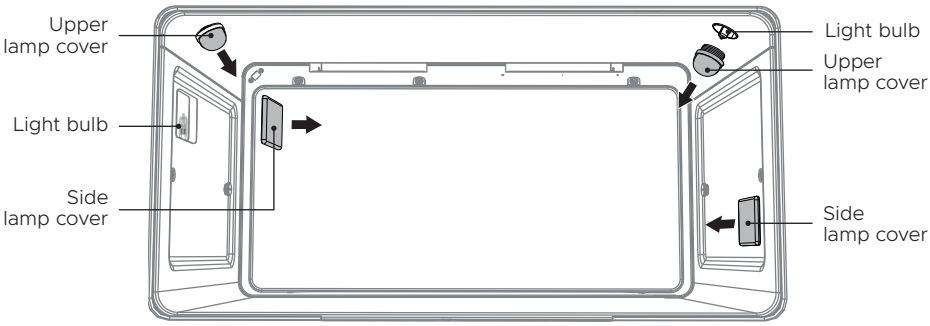

Using Self Clean

Self Clean uses extremely high temperatures to break down and burn off grease and grime. All that is left is a small amount of grey ash that you can easily wipe up.

There are two self clean cycles:

- **Standard Clean:** 4 hours, for normal or heavy soiling
- **Light Clean:** 3 hours, for light or localised soiling

IMPORTANT!

- You must clean the inside glass door panel BEFORE starting a self-clean cycle. Failure to do this may result in permanent staining or marking of the door glass.
  See 'Care and cleaning' for our recommendations on how to do this.
- Do not use oven cleaners, any degreasing cleaners, or oven liners.
- Remove all oven shelves, trays, bakeware and utensils from the oven before starting a Self Clean cycle (except side racks). If left in the oven they will be permanently damaged; items made from combustible material (eg wood, fabric, plastic) may even catch fire.
- Do not use your oven to clean miscellaneous parts.
- Make sure the room is well ventilated.
- Before starting a Self Clean cycle, make sure you move any pet birds to another, closed and well-ventilated room. Some pet birds are extremely sensitive to the fumes given off during a Self Clean cycle, and may die if left in the same room as the oven during such a cycle.
- During a Self Clean cycle, the oven reaches higher temperatures than it does for cooking. Under such conditions, the surfaces may get hotter than usual and children should be kept away.
- The oven door will be locked during the Self Clean cycle.
- If there are cracks or flaws on any of the oven door glass panes, if the oven seal is damaged or worn, or if the door does not close properly, do not start a Self Clean cycle. Call your Fisher & Paykel trained and supported service technician.

Before you start

1. Remove all oven shelves and any other accessories, bakeware, and utensils.
   Note: you do not need to remove the side racks.
2. Wipe up any spills, and along the inner edge of the oven surface around the seal. Failure to do so may discolour the oven surface.

IMPORTANT!

Avoid cleaning the seal itself as this may cause damage.

3. Check the inner glass pane of the oven door. If it has soiling on it (eg stains from greasy splatter), you will need to clean it manually before starting a Self Clean cycle.
   For instructions, see 'Care and cleaning'.

IMPORTANT!

- If soiling is left on the glass, it will become burnt on during the Self Clean cycle, making it very difficult to remove.

4. Close the oven door firmly.

To set Self Clean

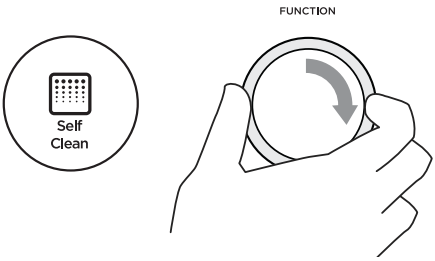

1 Turn the function dial to Self Clean.

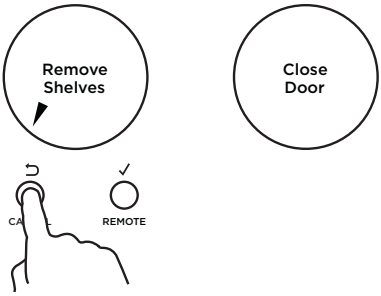

2 The display will prompt you to remove the oven shelves.

- Remove the oven shelves and any other bakeware or accessories still in the oven.
- Press and hold ⮌ to confirm.
- If the oven door is not closed properly, the display will also prompt you to close the door.

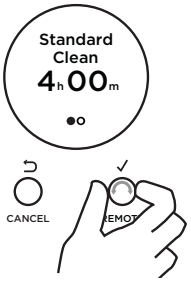

3 Scroll to choose between Standard Clean and Light Clean.

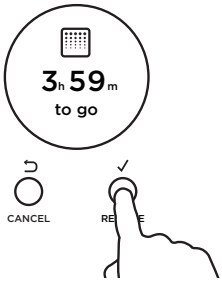

4 Press ✓ to confirm.

Self Clean is now set.

- The door will automatically lock and remain locked during the cycle.
- The display will start counting down the time remaining.

When Self Clean is finished

- A tone will sound.
- Self Clean Complete will show in the display.
- The display will flash.
- The door will unlock.



1. Press any button to stop the display flashing.
2. Wait for the oven to cool completely.
3. Wipe up the ash in the oven with a small brush or a damp cloth.
4. Dry with a lint-free cloth.
5. Replace the oven shelves.

To cancel Self Clean

IMPORTANT!

- A Self Clean cycle can be cancelled at any time.
- The door will not unlock until the oven has cooled to a safe temperature.
- Do NOT turn off the mains power supply to the oven (wall switch). Turning off the power while the oven is too hot may damage the oven and its surrounding cabinetry.

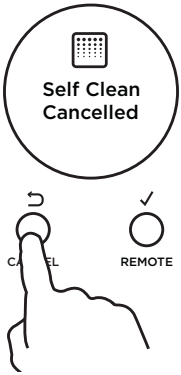

1. Press ⮌ to cancel Self Clean.

- Self Clean Cancelled will show in the display.
- The door will remain locked and the display will remain lit until the oven has cooled down to a safe temperature.

TROUBLESHOOTING

If there is a problem, check the chart below to see if you can fix it. If the problem cannot be fixed or persists, call your Fisher & Paykel trained and supported service technician or Customer Care.

General

PROBLEM	POSSIBLE CAUSES	WHAT TO DO
The oven does not work.	No power.	Check that the mains power supply (wall switch) is turned on, the fuse has not tripped and there is no power outage in your area.
	The clock has not been set	The oven will not work unless the clock is set. See 'Setting the clock'.
The oven does not work but the display is lit.	The oven is set for automatic cooking.	See 'Auto Cook' for instructions.
	The oven is in Demo Mode	Contact Customer Care
One or all of the lights do not come on, but the oven works.	The oven light bulb(s) have blown.	Replace the light bulb(s). See 'Care and cleaning' for instructions.
	The door is not correctly fitted.	See 'Care and cleaning' for instructions on fitting the door correctly.
	The oven is in Sabbath Mode and the 'Light off' option has been saved.	To quit Sabbath Mode, press and hold CANCEL. See 'User preference settings' for instructions on changing the 'Light off' option.
There is a power failure – can I still use the oven?	Power outage in your home or neighborhood.	In the event of power failure while cooking, return the oven dials in off position (O) to prevent overheating of the appliance. The oven cannot be used until power is restored.
The temperature indicator is blank and the oven control dials are unresponsive.	The control panel is locked.	See 'Locking the oven controls' for instructions.
The oven is not heating.	The door is not properly closed or it is opened too frequently during cooking.	The heating elements are disabled while the door is open. Make sure the door is properly closed and avoid opening it frequently during cooking.

General

PROBLEM	POSSIBLE CAUSES	WHAT TO DO
A glass pane in the oven door has cracked, chipped, or shattered.	Incorrect cleaning or the edge of the glass hitting against something.	You must **NOT** use the oven. Call your Fisher & Paykel trained and supported service technician or Customer Care.
I can feel hot air blowing out of the vents after I have turned the oven off.	This is normal.	For safety reasons the cooling fans will continue to run even when you have turned the function dial to 'OFF'. The fans will switch off automatically when the oven has cooled.
The oven fan comes on when I select a function that does not use a fan (eg bake).	This is normal. The fan comes on while the oven is preheating. It may turn off when the oven has reached the set temperature.	Wait until a long tone sounds and the temperature dial halo turns white: the oven will then be ready to use.
The oven has reached the set temperature but the temperature dial halo is still red (indicating that the oven is not ready to use).	This is normal: when heating up from cold, your oven is designed to initially heat to a temperature somewhat higher than what you have set. This is to provide optimal baking conditions right from the start.	Wait until a long tone sounds and the temperature dial halo turns white: the oven will then be ready to use.
The oven is heating but the display is dark.	The oven is set to 'Display off' option.	To quit the 'Display off' option, press and hold CANCEL until the display shows the time of day.
	The oven is in Sabbath Mode.	To quit Sabbath Mode, press and hold CANCEL until the display shows the time of day.
The oven cancels automatic cooking when I try to adjust the clock setting.	The oven was set for automatic cooking when you were trying to adjust the clock setting.	You can only adjust the clock setting while the oven is not set for automatic cooking.
The temperature dial halo never turns red when I use Grill .	This is normal: the halo stays white to indicate that the grill element provides instant radiant heat.	
The displays work, and the function and temperature dials halos come on but the oven does not heat up.	The oven is in 'Demo' mode.	Call Customer Care.

Self Clean function

PROBLEM	POSSIBLE CAUSES	WHAT TO DO
During a Self Clean cycle, the oven is louder than usual.	This is normal: the oven's cooling fans operate at their highest speed.	
The Self Clean cycle has finished but the oven door will not open.	The oven door is locked because the oven is still too hot to be used for cooking.	Wait until the Self Clean cycle has finished. If you cancelled a Self Clean cycle which was already underway, the oven still needs to cool down before it can be used. The oven door will automatically unlock.
I have cancelled a Self Clean cycle but cannot use the oven: • **the oven door will not open** • **the display is still counting down minutes or showing Self Clean Canceled** • **the dials and controls are unresponsive.**	This is normal: if the function dial halo is unlit, you have successfully cancelled the Self Clean cycle. However, the oven is still too hot to be used for cooking and needs to cool down.	Wait until the cool-down phase has finished. A long tone will sound and the oven door will automatically unlock when the oven is ready to use. Note: depending on when the Self Clean cycle was cancelled, the cool-down phase may take up to 45 minutes.
The oven is beeping and the display shows A2 **or** A3**.**	See section 'Alert codes' for instructions.	
There is a power cut during a Self Clean cycle.	Power cut.	The door will remain locked. Once the power is turned back on, the door will remain locked until the oven has cooled to a safe temperature.

Oven

PROBLEM	POSSIBLE CAUSES	WHAT TO DO
Condensation around oven (eg on control panel or top of oven door).	Food has high moisture content or local climate (temperature, humidity) is contributing to condensation.	Condensation is normal. You can wipe the drops off the control panel. If there is frequent or excessive condensation, make sure that cabinetry around the cooker is moisture-proofed.
Condensation building up in the oven while cooking on Grill.	Food in your oven releasing moisture as it cooks.	Allow the grill element to preheat for 5 minutes before placing food in the oven or try cooking on Fan grill instead.
Uneven baking.	Oven not properly preheated.	Wait until the halo around the temperature dial has changed from orange to white before putting food in.
	Unsuitable or incorrectly arranged bakeware.	See ‘Cooking guide’ for advice.

Cooktop burners

PROBLEM	POSSIBLE CAUSES	WHAT TO DO
None of the burners, grill, or griddle will light.	No power supply.	Check that there is no power outage in your area and that the power supply to the cooker is switched on at the circuit breaker panel.
	No gas.	Check that the gas supply to the house is working. You should hear the gas when you turn a burner on. If you are using bottled gas, check that it is not empty.
The ignitor keeps clicking (continuous spark) even when a burner has lit.	Dirty or wet ignitor(s).	Clean the ignitor(s). See ‘Care and cleaning’ for instructions.
Some burners will not light. Flames do not burn all around the burner cap.	Burner parts or ignitors may be wet, dirty, or misaligned.	Check that the burner parts are clean, dry, and correctly assembled. Check that the ignitors are clean and dry. See ‘Care and cleaning’ for instructions.
There is no clicking when I try to light a burner.	The ignitor is dirty or there is a power outage.	Clean the ignitor(s). See ‘Care and cleaning’ for instructions.

Cooktop burners

PROBLEM	POSSIBLE CAUSES	WHAT TO DO
There is a power failure – can I still use the cooktop burners?	Power outage in your area.	The cooktop burners can still be used. To light them: **1** Holding a lighted match to the flame spreader, push in on the control dial and turn anticlockwise to LITE. **2** When the flame is burning all the way around the burner, you may adjust the heat. **IMPORTANT!** **If the flame is blown out during a power failure, turn the dial immediately to O (OFF), as the burner will not automatically relight and gas may escape.**
The flames have suddenly gone out.	A draft or a spill has extinguished the flame.	No action required. The burner will detect this and automatically relight. However, if there has been a large spill, we recommend turning the burners off and cleaning the burners and sump area. See 'Care and cleaning' for instrucions.
There is a slight 'extinction pop' or flash after I've turned a cooktop burner off.		This is normal for LP gas and requires no action.
The burner flames are uneven, very large, yellow or yellow-tipped or sooty.	Technical fault: the gas is the wrong type or hasn't been adjusted properly.	Do not use your cooktop burners. Contact your Fisher & Paykel trained and supported service technician or Customer Care.

If there is a problem with the oven, the cooker will:

- automatically suspend all oven functions
- beep five times
- display an alert code.

IMPORTANT!

Do not turn off the mains power supply to the cooker (wall switch) if you get an alert code, unless the instructions in the chart following specifically instruct you to. There are cooling fans within the cooker which are needed to cool the cooker components. Turning off the power while the cooker is too hot may damage the cooker and its surrounding cabinetry.

What to do if an alert code is displayed

1. If the beeping hasn't stopped already, touch any control to stop it.
2. Make a note of the alert code displayed. You may need this information.
3. Check the chart following to see if you can fix the problem yourself and follow the instructions.
4. If you can fix the problem and the alert code does not reappear, you can keep using your oven.

OR

If you can't fix the problem yourself or the alert code reappears and the problem persists: wait until the cooling fans have stopped and the oven has completely cooled down, then turn the power to the cooker off at the wall and call your Authorised Repairer or Customer Care with the alert code information.

ALERT CODES

ALERT CODE	POSSIBLE CAUSES	WHAT TO DO
A1	The oven has overheated.	**1** Allow the oven to cool down. **2** Once the oven has cooled down and the door has unlocked, the alert code will disappear. You can now use the oven again.
A2	Door lock error: the door cannot be locked after you have started a Self Clean cycle.	**1** Turn the power to the oven off at the wall and on again. **2** Wait approximately 10 seconds. This is to allow the door lock to return to its initial position. **3** Set the clock. See 'Setting the clock' in 'First use' for instructions. **4** Try starting a Self Clean cycle again, making sure that you close the door firmly. See 'Using the Self Clean function'.
A3	Door lock error: the door cannot be unlocked after a Self Clean cycle has finished.	**1** Turn the power to the oven off at the wall and on again. **2** Try touching on the oven door to help the door lock disengage. **3** If this doesn't help and the alert code reappears, call your Fisher & Paykel trained and supported service technician or Customer Care.
F2 F + number	Technical fault.	**1** Note down the alert code. **2** Wait until the cooling fans have stopped and the oven has completely cooled down. **3** Turn the power to the oven off at the wall. **4** Call your Fisher & Paykel trained and supported service techncian or Customer Care with the alert code information.

Before you call for service or assistance

Check the things you can do yourself. Refer to the installation instructions and your user guide and check that:

1 Your product is correctly installed.

2 You are familiar with its normal operation.

If after checking these points you still need assistance or parts, please refer to the Service & Warranty book for warranty details, contact your nearest Fisher & Paykel service center, Customer Care, or get in touch via our website www.fisherpaykel.com.

Complete and keep for safe reference:

Model _____

Serial No. _____

Purchase Date _____

Purchaser _____

Dealer _____

Suburb _____

Town _____

Country _____

This oven has been designed and constructed in accordance with the following codes and specifications:

In New Zealand and Australia

- AS/NZS 60335-1 General Requirements for Domestic electrical appliances
- AS/NZS 60335-2-6 Particular Requirements for Domestic electrical cooking appliances
- AS/NZS CISPR 14.1 2010 Electromagnetic Compatibility Requirements.

In Europe and United Kingdom

- Safety requirements of EEC Directive "Low voltage" 2006/95:
  EN 60335-1 General Requirements for Domestic electrical appliances
  EN 60335-2-6 Particular Requirements for Domestic electrical cooking appliances
- Safety requirements of EEC Directive "EMC" 2014/30/EU:
  EN 55014-1, EN 55014-2, EN 61000-3-2, EN 61000-3-3 Electromagnetic Compatibility Requirements
- Safety requirements of EEC Directive "Radio Equipment" RED 2014/53/EU
- Safety requirements of the "Gas" Directive 2009/142/EC (until the 20/04/2018) OR Regulation (EU) 2016/426 (starting from the 21/04/2018).

Requirements of EEC Directive 93/68.

European directive 2012/19/EC on Waste Electrical and Electronic Equipment (WEEE) (for European Union countries only)

GB This appliance is marked according to the European directive 2012/19/EC on Waste Electrical and Electronic Equipment (WEEE). By ensuring this product is disposed of correctly, you will help prevent potential negative consequences for the environment and human health, which could otherwise be caused by inappropriate waste handling of this product.

The symbol  on the product, or on the documents accompanying the product, indicates that this appliance may not be treated as household waste. Instead it shall be handed over to the applicable collection point for the recycling of electrical and electronic equipment. Disposal must be carried out in accordance with local environmental regulations for waste disposal. For more detailed information about treatment, recovery and recycling of this product, please contact your local city office, your household waste disposal service or the shop where you purchased the product.

ENERGY GUIDELINES (UK IE ONLY)

SPECIFICATIONS	OR90SCG6	OR90SDG6
WEIGHT (KG)	123	123
NUMBER OF OVEN CAVITIES	1	1
CAVITY VOLUME (LITRES)	120	120
ENERGY CONSUMPTION* (KWH/CYCLE)		
Conventional	1.62	1.62
Slow Cook	0.91	0.91
ENERGY INDEX		
Conventional	153.50	153.50
Slow Cook	86.34	86.34
STANDBY POWER (WATTS)		
Standard	< 1	< 1
Networked	< 2	< 2
TIME TO STANDBY (SECONDS)		
Standard	20	20
Networked	20	20

*Energy consumption for electric cooking appliances are calculated using the following Standard: BS EN 60350 Part 1- Ranges, ovens, steam ovens and grills – Methods for measuring performance.

Reducing the environmental impact - Electric

Reducing energy consumption will reduce the impact of cooking on the environment. The following tips can help you to reduce your energy consumption:

- Do not preheat the oven too early. Aim to have the oven hot at the same time as the food is ready to be placed in it.
- Maximise the use of your preheated oven – cook or bake in batches.
- Minimise the number of times you open the oven door during cooking (to reduce heat loss).
- Cook multiple dishes at the same time.
- Use the residual heat in the oven to finish the cooking process (turn the oven off a few minutes before the cooking time is up).
- Use ceramic or glass cooking dishes which may reduce the cooking time or allow you to reduce the oven temperature.
- Use fan functions wherever possible. These functions may allow you to reduce cooking times and/or temperatures. Fan forced functions will allow you to bake on multiple shelves at the same time.
- Replace oven seals if they become damaged. A damaged seal will decrease the efficiency of your oven.
- Cutting food into smaller pieces will reduce cooking time.
- Do not use the oven to defrost food.

Reducing the environmental impact - Gas

Reducing energy consumption will reduce the impact of cooking on the environment. The following tips can help you to reduce your energy consumption:

- Thawing frozen food in the refrigerator first
- Using a moderate setting to conserve gas
- Having your burners adjusted by a qualified technician if the flame is yellow
- Ensuring burner parts are clean and dry, as clogged ports will reduce efficiency.
- Using the correct sized pot
- Adjusting the flame correctly - the flame should not extend beyond the edge of the pot
- Using a pressure cooker
- Cutting food into smaller pieces - this will reduce cooking time
- Use a steamer or a pan with a divider to cook different vegetables at the same time
- Using a cover when boiling water to reduct the time it takes to get to the boil
- Simmering liquid cooked foods instead of boiling vigorously
- Keeping pot lids on to reduce heat loss

OR90SCG6B1, OR90SDG6X1

	Symbol **Símbolo** Symbole **Symbol** Symbool	Value **Valore** Valeur **Wert** Waarde	Unit **Unità di misura** Unité **Einheit** Eenheid
L1	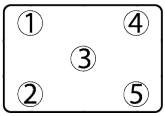	Free standing **Libera installazione** Pose libre **Freistehenden** Vrijstaande	/
L2		**5**	/
L3	EE$_{\text{gas burner}}$ **EE$_{\text{gas burner}}$** EE$_{\text{brûleur à gaz}}$ **EE$_{\text{gas burner}}$** EE$_{\text{gasbrander}}$	**1) 60,5 %** **2) 55,8 %** **3) 55,2 %** **4) 60,5 %** **5) 55,8 %**	/
L4	EE$_{\text{gas hob}}$ **EE$_{\text{gas hob}}$** EE$_{\text{plaque de cuisson au gaz}}$ **EE$_{\text{gas hob}}$** EE$_{\text{gaskookplaat}}$	**57,5 %**	/

L1
Type of hob
Tipologia di piano cottura
Type de plaque
Art der Kochmulde
Type kookplaat

L2
Number of gas burners
Numero di bruciatori a gas
Nombre de brûleurs à gaz
Anzahl der Gasbrenner
Aantal gasbranders

L3
Energy efficiency per gas burner
Efficienza energetica per ciascun bruciatore a gas
Efficacité énergétique par brûleur à gaz
Energieeffizienz je Gasbrenner
Energie-efficiëntie per gasbrander

L4
Energy efficiency for the gas hob
Efficienza energetica per il piano cottura a gas
Efficacité énergétique de la plaque de cuisson au gaz
Energieeffizienz der Gaskochmulde
Energie-efficiëntie van de gaskookplaat

*Energy consumption for gas cooking appliances are calculated using the following Standard: BS EN 30-2-1-Rational use if energy -Domestic cooking appliances burning gas.

FISHERPAYKEL.COM

© Fisher & Paykel Appliances 2026. All rights reserved.

The models shown in this guide may not be available in all markets and are subject to change at any time.

The product specifications in this guide apply to the specific products and models described at the date of issue. Under our policy of continuous product improvement, these specifications may change at any time.

For current details about model and specification availability in your country, please go to our website or contact your local Fisher & Paykel dealer.

591514I 11.26