FISHER & PAYKEL

COMPANION PRODUCTS

Coffee Maker EB60
Steam Oven OS60
Microwave Oven OM60
models

INSTALLATION GUIDE

CONTENTS

Coffee maker		**1**
1	Safety and warnings	2
2	Parts supplied	3
3	Prior to installation	3
4	After installation	3
5	Product dimensions	4
6A	Cabinetry dimensions (460mm high cavity)	5
6B	Cabinetry dimensions (480mm cavity trim kit)	6
7	Installation instructions	7
8	Connect the warming drawer to the mains supply	8
9	Final checklist	9

Steam oven		**10**
1	Safety and warnings	11
2	Prior to installation	12
3	After installation	12
4	Product dimensions	13
5A	Cabinetry dimensions (460mm high cavity)	14
5B	Cabinetry dimensions (480mm cavity trim kit)	15
6	Electrical hook-up	16
7	Secure the oven to the cabinetry	16
8	Final checklist	17

Microwave oven		**18**
1	Safety and warnings	19
2	Prior to installation	20
3	After installation	20
4	Product dimensions	21
5A	Cabinetry dimensions (460mm high cavity)	22
5B	Cabinetry dimensions (480mm cavity trim kit)	23
6	Electrical hook-up	24
7	Secure the oven to the cabinetry	24
8	Final checklist	25

IMPORTANT!
SAVE THESE INSTRUCTIONS

COFFEE MAKER

EB60 models

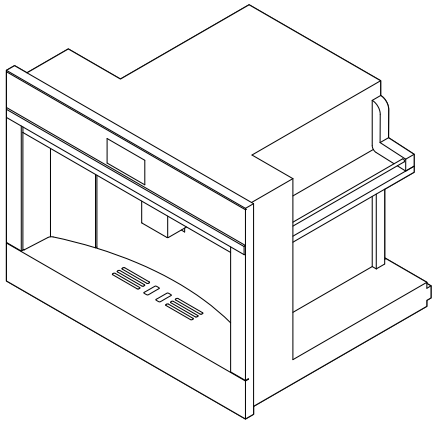

IMPORTANT SAFETY INSTRUCTIONS!

Installation

⚠ WARNING!



Cut Hazard
Take care – some edges are sharp.
Failure to use caution could result in injury or cuts.

Checking for transport damage
After removing the packaging, make sure the product is complete and undamaged and that all accessories are present. Do not use the appliance if it is visibly damaged. Contact Customer Care.

IMPORTANT!

- **Installation must be performed by a qualified professional in compliance with legislation in force in the country of installation.**
- **The packing elements (plastic bags, polystyrene foam, etc.) should be kept out of reach of children.**
- **Never install the appliance in rooms where the temperature may drop to 0°C or lower.**
- **Customise the water hardness as soon as possible following the instructions in your user guide.**
- **This appliance can be installed over a built-in oven if the latter is fitted with a cooling fan at the rear (maximum microwave power: 3 kW).**
- **Connecting the appliance**
- **Danger! Check that the mains power supply voltage corresponds to the value indicated on the rating plate on the bottom of the appliance.**
- **Connect the appliance to an efficiently earthed and correctly installed socket with a minimum current rating of 10A only.**
- **Do not allow children and animals to stop or linger near the appliance when it is pulled out of the cabinet.**
- **If the power socket does not match the plug on the appliance, have the socket replaced with a suitable type by a qualified professional. To comply with safety directives, an omnipolar switch with a minimum contact distance of 3 mm must be installed.**
- **Do not use multiple sockets or extensions.**
- **If the power socket does not match the plug on the appliance, have the socket replaced with a suitable type by a qualified professional. To comply with safety directives, an omnipolar switch with a minimum contact distance of 3 mm must be installed.**
- **Do not use multiple sockets or extensions.**
- **Safety cutout devices must be included in the mains power supply in compliance with the installation regulations in the country concerned.**
- **This appliance conforms to EC Regulation 1935/2004 on materials and articles intended to come into contact with food.**
- **Do not allow children and animals to stop or linger near the appliance when it is pulled out of the cabinet-.**
- **Do not leave the machine pulled out of the cabinet when it is being used.**
- **Do not leave the machine pulled out of the cabinet when it is not needed.**
- **Install the machine according to the instructions in the handbook to guarantee there are no spills when it is pulled out from the cabinet.**
- **The rails fixing panel must have a thickness suited to the fixing screws supplied standard.**
- **The panel material must be suited to the machine weight of approximately 25kg.**

DISPOSAL

- **The appliance must not be disposed of with household waste, but taken to an authorised waste separation and recycling centre.**

IMPORTANT!
SAVE THESE INSTRUCTIONS

2 PARTS SUPPLIED



Screws
(28)

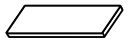

Spacers
(4) for side
(4) for bottom

Rails (2)

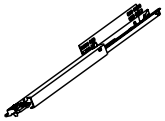



Clip (1)

3 PRIOR TO INSTALLATION

- The countertop and coffee maker cavity are square and level, and are the required dimensions.
- The installation will comply with all clearance requirements and applicable standards and regulations.
- The isolating switch will be easily accessible to the customer with the coffee maker installed.
- The electrician provides sufficient free length of power supply cable to reach from the bottom rear of the cavity to at least 1.5m in front of the bottom edge of the opening.
- The cable may enter the cavity from the side, top or bottom, but top entry must be at the rear of the cavity.
- The coffee maker connection socket (if fitted) is outside the cavity if the oven is flush to the rear wall.
- The coffee maker will rest on a surface that can support its weight.
- The height from the floor suits the customer.
- You consult local building authorities and by-laws if in doubt regarding installation.

IMPORTANT!

Some environmental factors and cooking habits can cause condensation in and around the coffee maker during use. To protect surrounding cabinetry from possible damage caused by frequent or excessive condensation, we recommend moisture-proofing the cavity.

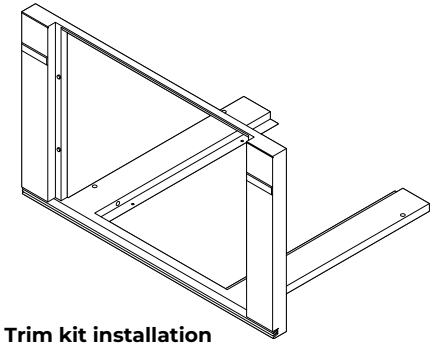

Optional Trim kit installation
If you are using a 762mm trim kit, refer to the separate Trim Kit Installation Guide.

4 AFTER INSTALLATION

IMPORTANT!

Take extra care not to damage the lower trim of the coffee maker during installation. The trim is important for correct air circulation and allows the door to open and close without obstruction. The manufacturer does not accept any responsibility for damage resulting from incorrect installation.

- The coffee maker can be used fully without obstruction.
- The power supply cable does not touch any hot metal parts.
- The isolating switch is easily accessible to the customer with the coffee maker installed.
- You complete the 'Final checklist' at the end of the installation.
- If, after following the instructions given, correct performance cannot be achieved, please contact your nearest Fisher & Paykel Authorised Service Center, Customer Care, or contact us through our local website listed at the end of this document.

5 PRODUCT DIMENSIONS

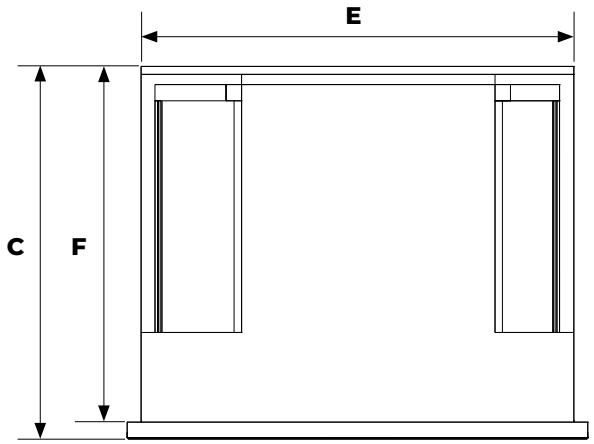

TOP

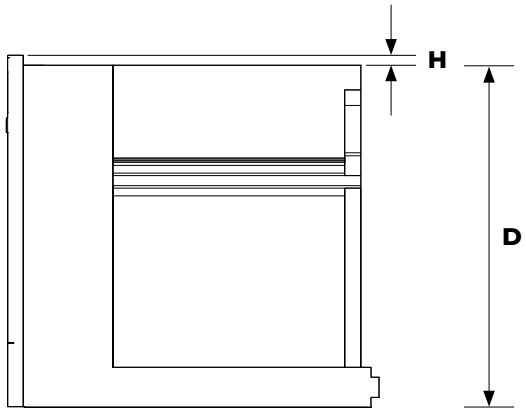

SIDE

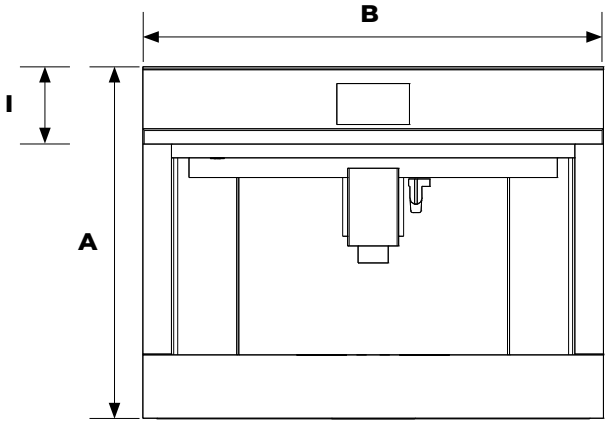

FRONT

PRODUCT DIMENSIONS		EB60 MODELS
		mm
A	Overall height of product	458
B	Overall width of product	596
C	Overall depth of product	480
D	Height of chassis	445
E	Width of chassis	560
F	Depth of chassis	460
G	Depth of coffee maker frame and control panel	20
H	Stepdown control panel to chassis	13
I	Height of control panel	100

6A CABINETRY DIMENSIONS (460mm HIGH CAVITY)

Verify the minimum measurements required for correct installation of the appliance. The coffee maker must be installed in a column and the column must be firmly fixed to the wall with commercially available brackets.

IMPORTANT!

- **All installation or maintenance operations must be performed with the appliance disconnected from the mains electricity supply.**
- **Kitchen furniture in direct contact with the appliance must be heat resistant 65°C min.**
- **To guarantee correct ventilation, leave a gap at the bottom of the cabinet (see measurements below).**

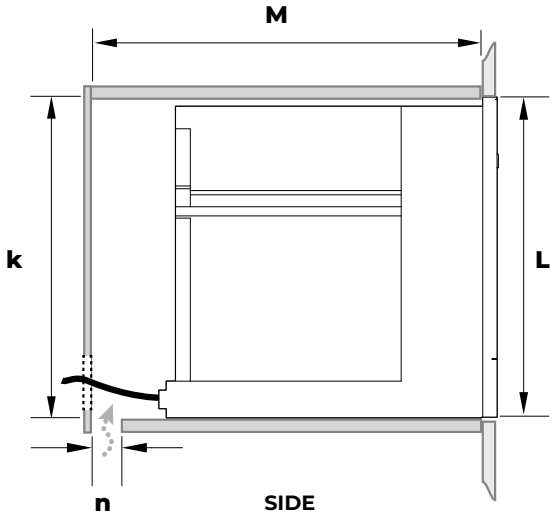

SIDE

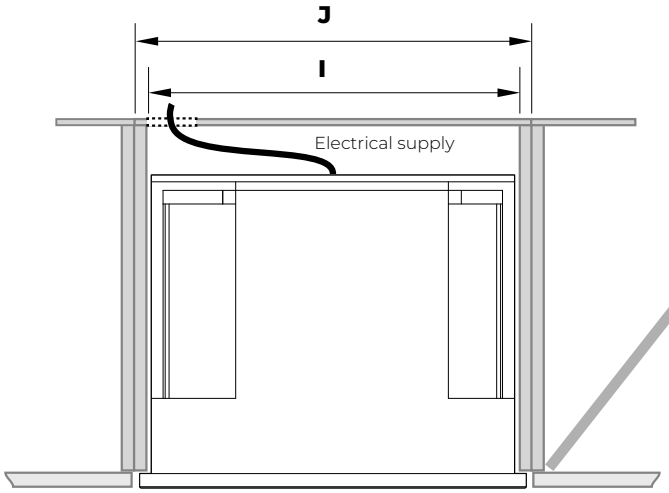

TOP

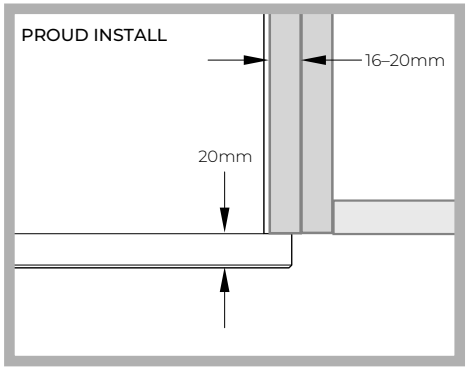

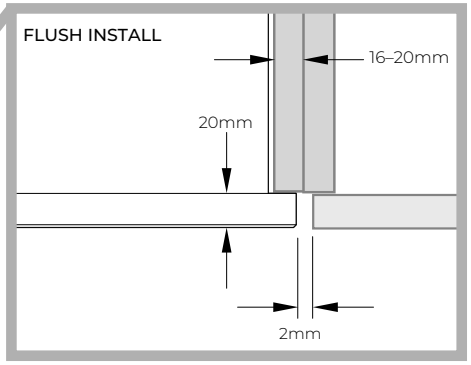

CABINETRY DIMENSIONS		EB60 MODELS
		mm
I	Minimum inside width of cavity	560
J	Overall width of cabinetry	600
K	Minimum inside height of cavity	450
L	Overall height of cabinetry	460
M	Minimum inside depth of cavity	545
n	Ventilation Air Gap	50

6B CABINETRY DIMENSIONS (480mm CAVITY TRIM KIT)

Verify the minimum measurements required for correct installation of the appliance. The coffee maker must be installed in a column and the column must be firmly fixed to the wall with commercially available brackets.

IMPORTANT!

- **All installation or maintenance operations must be performed with the appliance disconnected from the mains electricity supply.**
- **Kitchen furniture in direct contact with the appliance must be heat resistant 65°C min.**
- **To guarantee correct ventilation, leave a gap at the bottom of the cabinet (see measurements below).**

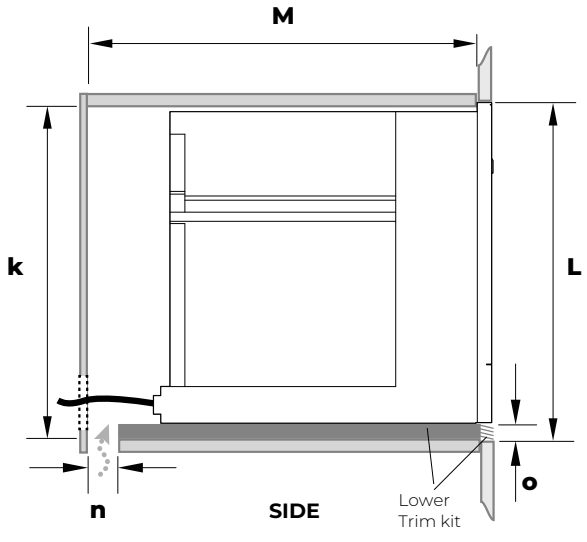

SIDE

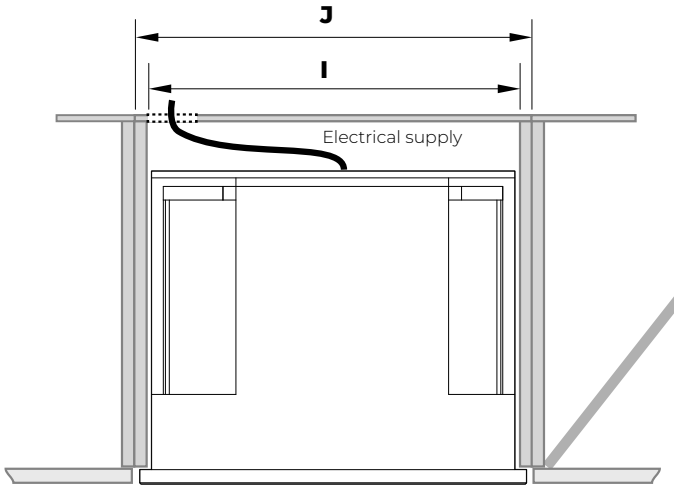

TOP

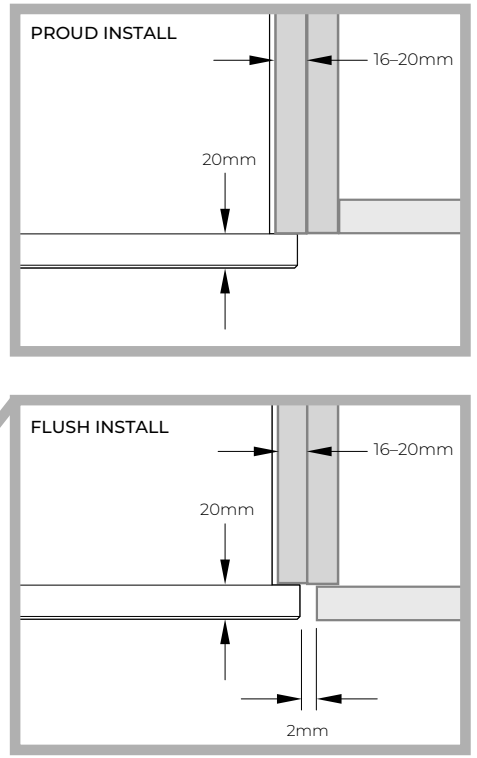

CABINETRY DIMENSIONS		EB60 MODELS
		mm
I	Minimum inside width of cavity	560
J	Overall width of cabinetry	600
K	Minimum inside height of cavity	470
L	Overall height of cabinetry	480
M	Minimum inside depth of cavity	545
n	Ventilation air vent	50
o	Height of trim kit	20

7 INSTALLATION INSTRUCTIONS

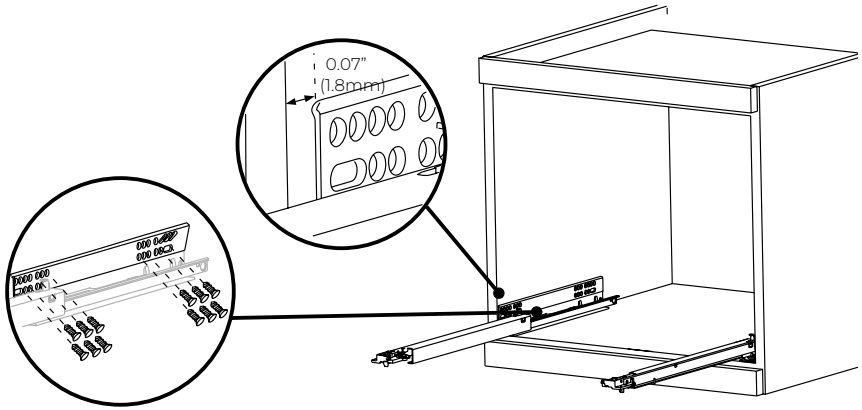

1 Position the rails on the sides of the cabinet. Fix with the screws provided, then extract them completely.
- If the coffee maker is installed over a warmer drawer, use the top surface of this as a reference to position the rails.
- In this case, there will be no surface to rest the rails on.

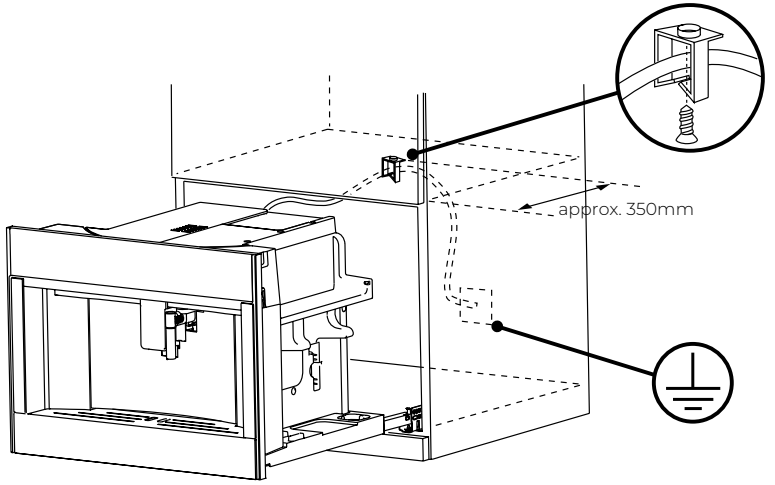

2 Fix the power cable with the clip. The power cable must be long enough to allow the appliance to be pulled out from the cabinet to fill the coffee bean container.
- The appliance must be earthed in compliance with legislation.
- Electrical connections must be performed by a qualified electrician following the instructions.

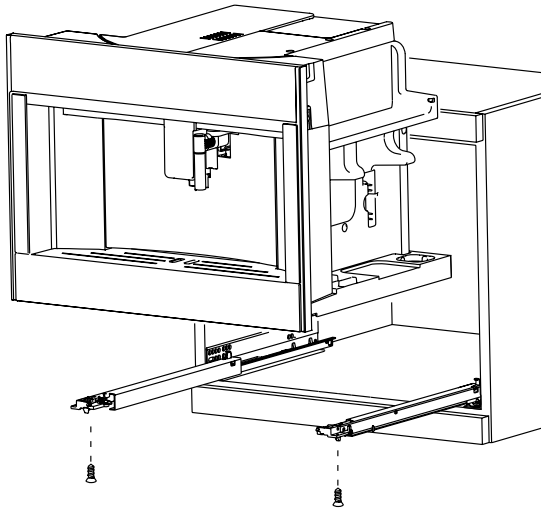

3 Position the appliance on the rails, making sure the pins are correctly inserted in the housings, then fix it with the screws supplied. If the height of the appliance requires adjusting, use the spacer disks provided.

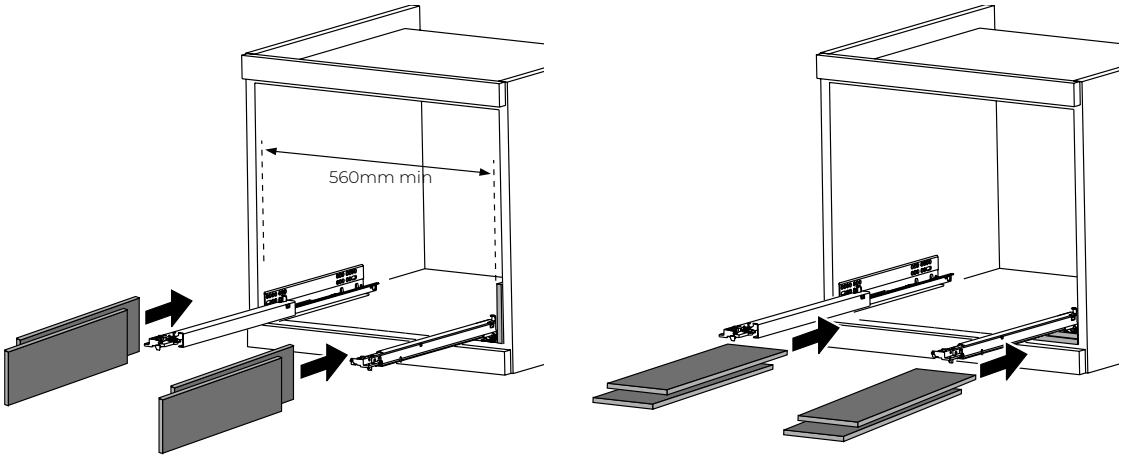

4 If necessary, correct alignment of the appliance by positioning the spacers supplied under or at the sides of the support.

8 CONNECT THE WARMING DRAWER TO THE MAINS SUPPLY

IMPORTANT!

- **All electrical work may only be carried out by suitably qualified and competent persons in accordance with national and local safety regulations.**
- **This warming drawer must be earthed.**

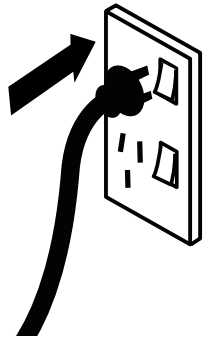

Before placing the coffee maker into the cavity, route the power cord into the back of the cavity and plug it in to the switched socket. The switched socket should be in an easily accessible area within 900mm of the centre rear of the product.

Power requirements

Model Code	Power	Voltage	Wattage	Hz
EB60	**6.1 A**	**220-240 V**	**220-240 W**	**50-60 Hz**

9 FINAL CHECKLIST

TO BE COMPLETED BY THE INSTALLER

- ☐ Make sure the coffee maker is level and securely fitted to the cabinetry.
- ☐ Check the lower trim is undamaged.
- ☐ Check there is adequate clearance. This is to ensure correct air circulation.
- ☐ Make sure any cable ties and internal packaging has been removed from the coffee maker cavity.
- ☐ Make sure all coffee maker vents and openings are clear and free of any obstruction or damage.

IMPORTANT!
Failure to make sure all vents are clear may result in poor product performance.

- ☐ Make sure the isolating switch is accessible by the customer.

TEST OPERATION:

- ☐ Turn the power to the coffee maker on. The display should light up.
- ☐ Have you demonstrated the basic operation to the customer?
- ☐ Fill the water tank to the indicated level.

Complete and keep for safe reference:

Model _____

Serial No. _____

Purchase Date _____

Purchaser _____

Dealer Address _____

Installer's Name _____

Installer's Signature _____

Installation Company _____

Installation Date _____

STEAM OVEN

OS60 models

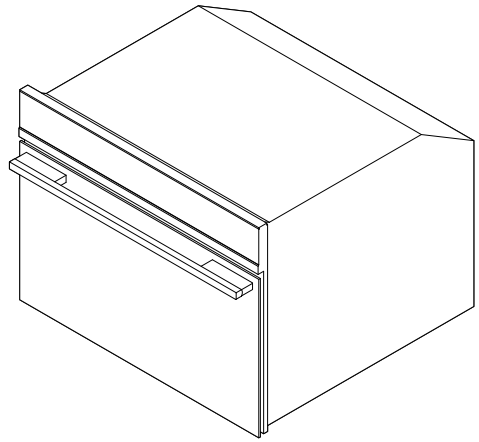

Installation

⚠ WARNING!



Electrical Shock Hazard
Before carrying out any work on the electrical section of the appliance, it must be disconnected from the mains electricity supply.
Connection to a good earth wiring system is absolutely essential and mandatory.
Alterations to the domestic wiring system must only be made by a qualified electrician
Failure to follow this advice may result in electrical shock or death.

⚠ WARNING!



Fire Hazard
Do not use adapters, reducers, or branching devices to connect this appliance to the mains power supply.
Failure to follow this advice may result in overheating, burning, or fire.

⚠ WARNING!



Cut Hazard
Take care – some edges are sharp.
Failure to use caution could result in injury or cuts.

IMPORTANT SAFETY INSTRUCTIONS!

To avoid hazard, follow these instructions carefully before installing or using this appliance.

- **Save these instructions for the local inspectors use.**
- **Please make this information available to the person installing the appliance – doing so could reduce your installation costs.**
- **This oven is to be installed and connected to the electricity supply only by an authorised person.**
- **Do not allow children and animals to stop or linger near the appliance when it is pulled out of the cabinet.**
- **If the installation requires alterations to the domestic electrical system, call a qualified electrician. The electrician should also check that the socket cable section is suitable for the electricity drawn by the oven.**
- **The oven must be earthed.**
- **Installation must comply with your local building and electricity regulations.**
- **This appliance must be installed and connected to the mains power supply only by a suitably qualified person according to these installation instructions and in compliance with any applicable local building and electricity regulations. Failure to install the appliance correctly could invalidate any warranty or liability claims.**
- **If the power supply cable is damaged, it must be replaced by the manufacturer, its service agent or similarly qualified person in order to avoid a hazard.**
- **A circuit breaker is recommended.**
- **Do not use adaptors, reducers or branching devices to connect the oven to the mains electricity supply, as they can cause overheating and burning.**

Electrical requirements

- **Connect oven with copper wire only.**
- **Do not cut the conduit.**
- **A U.L. listed conduit connector must be provided at the junction box.**
- **Do not earth to a gas pipe.**
- **Do not have a fuse in the earthed or neutral circuit.**
- **Fuse both sides of the line.**
- **A time delay fuse or circuit breaker is recommended. If using a time delay fuse, then fuse both sides of the line.**
- **Flexible armored cable from the appliance should be connected directly to the junction box.**
- **Connect directly to the fused disconnect (or circuit breaker box) through flexible, armored or non-metallic sheathed, copper cable (with earthed wire).**
- **If codes permit and a separate earthed wire is used, it is recommended that a qualified electrician determine that the earthed path and wire gauge are in accordance with local codes.**

IMPORTANT!
SAVE THESE INSTRUCTIONS

2 PRIOR TO INSTALLATION

- The countertop and oven cavity are square and level, and are the required dimensions.
- The installation will comply with all clearance requirements and applicable standards and regulations.
- The isolating switch will be easily accessible to the customer with the oven installed.
- The electrician provides sufficient free length of power supply cable to reach from the bottom rear of the cavity to at least 1.5m in front of the bottom edge of the opening.
- The cable may enter the cavity from the side, top or bottom, but top entry must be at the rear of the cavity.
- The oven connection socket (if fitted) is outside the cavity if the oven is flush to the rear wall.
- The oven will rest on a surface that can support its weight.
- The height from the floor suits the customer.
- You consult local building authorities and by-laws if in doubt regarding installation.

IMPORTANT!

Some environmental factors and cooking habits can cause condensation in and around the oven during use. To protect surrounding cabinetry from possible damage caused by frequent or excessive condensation, we recommend moisture-proofing the oven cavity.

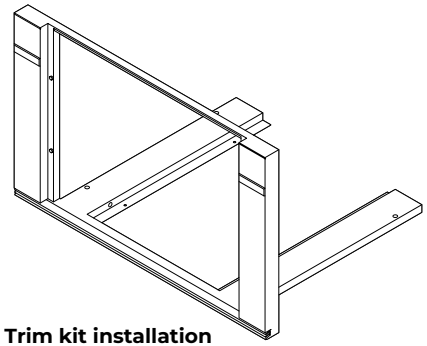

Optional Trim kit installation
If you are using a 762mm trim kit, refer to the separate Trim Kit Installation Guide.

3 AFTER INSTALLATION

IMPORTANT!

Take extra care not to damage the lower trim of the oven during installation. The trim is important for correct air circulation and allows the door to open and close without obstruction. The manufacturer does not accept any responsibility for damage resulting from incorrect installation.

- The oven door(s) can open fully without obstruction.
- The power supply cable does not touch any hot metal parts.
- The isolating switch is easily accessible to the customer with the oven installed.
- You complete the ‘Final checklist’ at the end of the installation.
- If, after following the instructions given, correct performance cannot be achieved, please contact your nearest Fisher & Paykel Authorised Service Center, Customer Care, or contact us through our local website listed at the end of this document.

4 PRODUCT DIMENSIONS

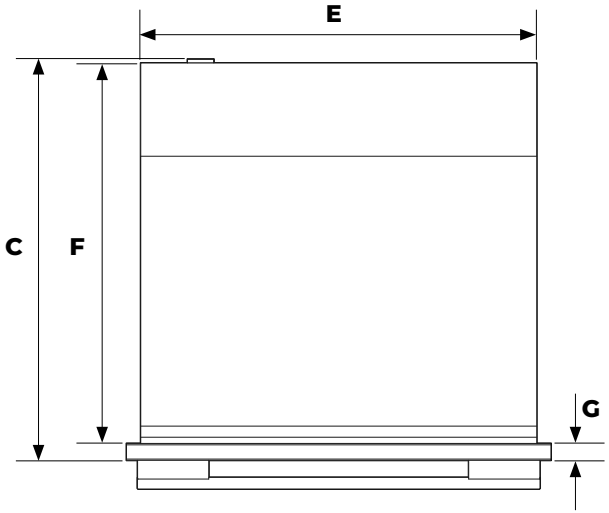

TOP

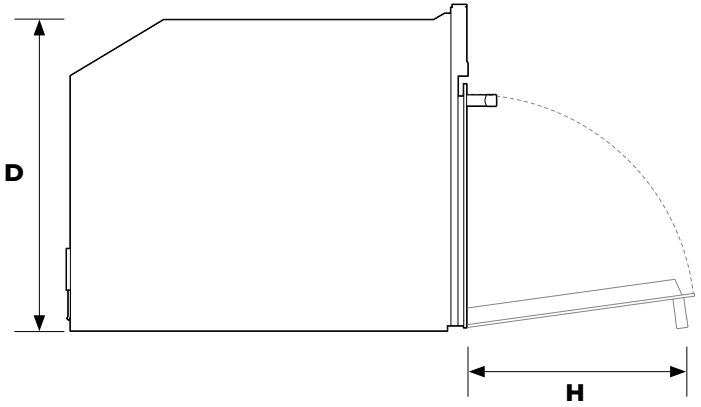

SIDE



FRONT

PRODUCT DIMENSIONS		OS60 MODELS
		mm
A	Overall height of product	458
B	Overall width of product	596
C	Overall depth of product (excluding handle and dials)	562
D	Height of chassis	445
E	Width of chassis	556
F	Depth of chassis	540
G	Depth of oven frame and control panel (=distance between front of chassis and front of oven door, excl. knobs)	22
H	Depth of oven door when fully open (measured from front of control panel)	320

5A CABINETRY DIMENSIONS (460mm HIGH CAVITY)

- The oven can be installed under a cooktop, in a column.
- The cabinet material must be able to withstand heat.
- The oven must be centered within the walls of the cabinet and fixed with the screws and bushings that are provided.

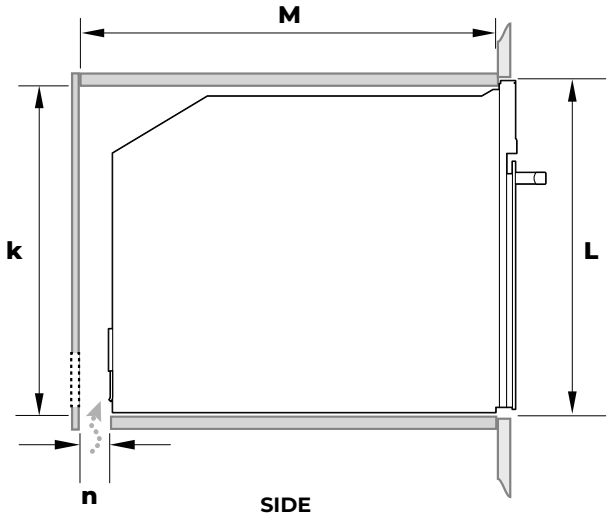

SIDE

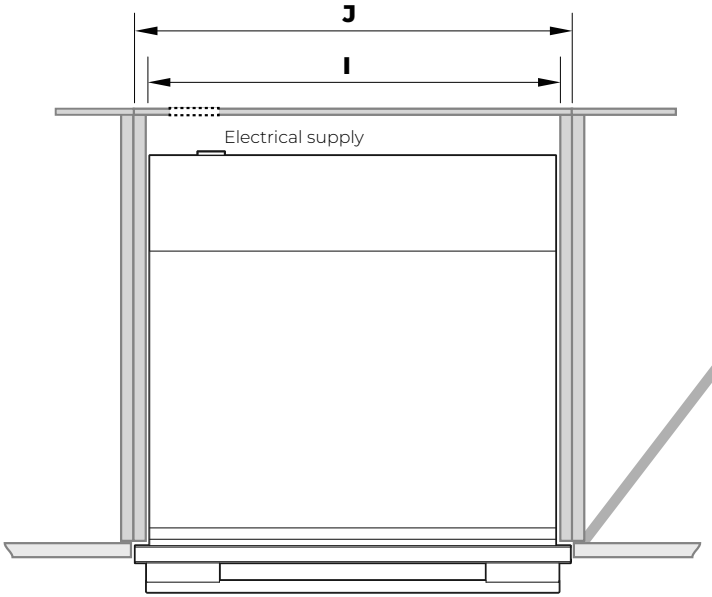

TOP

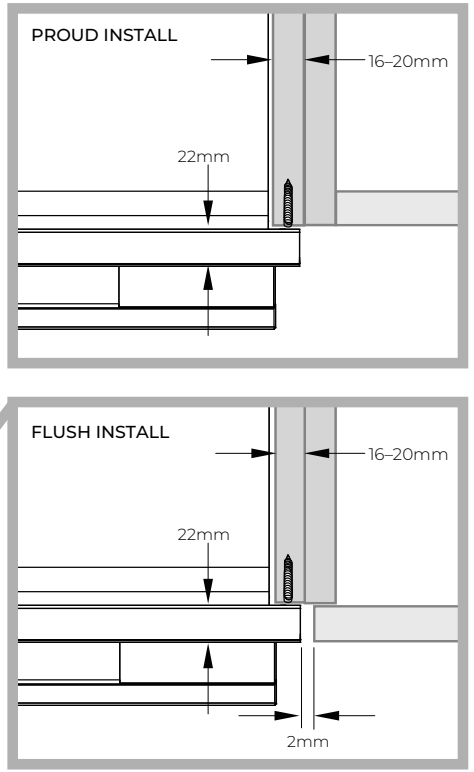

CABINETRY DIMENSIONS		OS60 MODELS
		mm
I	Minimum inside width of cavity	560
J	Overall width of cabinetry	600
K	Minimum inside height of cavity	450
L	Overall height of cabinetry	460
M	Minimum inside depth of cavity	560
n	Ventilation air vent	50

Note: if installing a cooktop above the oven, ensure adequate clearance is provided for the cooktop as per the cooktop manufacturer's instructions.

5B CABINETRY DIMENSIONS (480mm CAVITY TRIM KIT)

- The oven must be installed under a cook top, in a column.
- The cabinet material must be able to withstand heat.
- The oven must be centered within the walls of the cabinet and fixed with the screws and bushings that are provided.

To install the trim kit, refer to the instructions which accompany it.

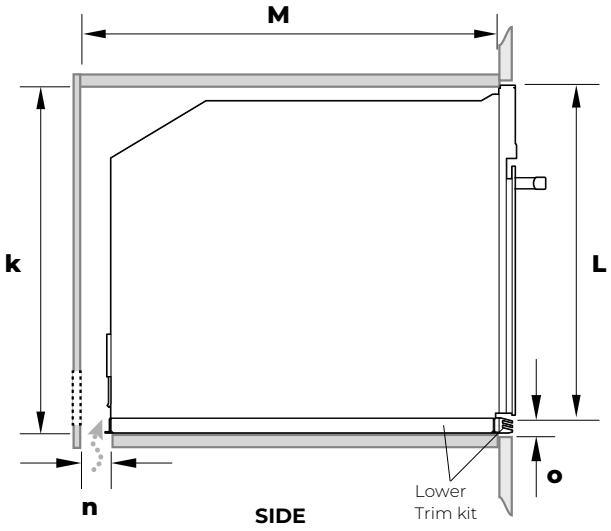

SIDE

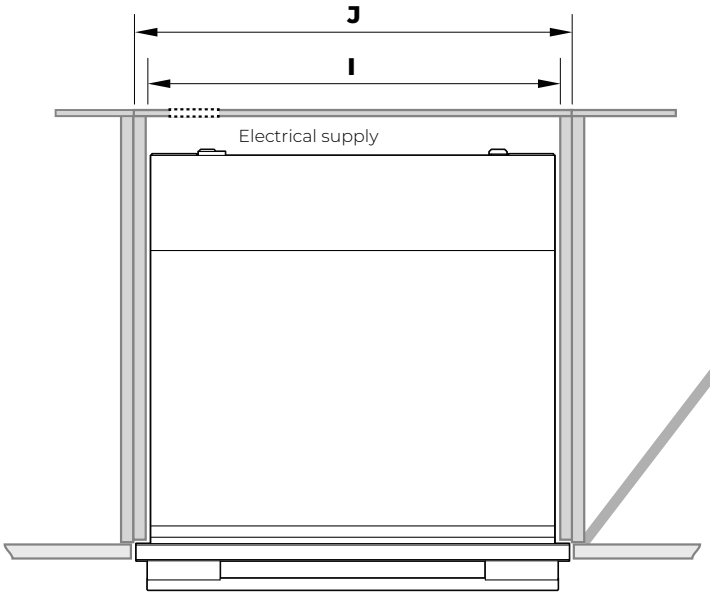

TOP

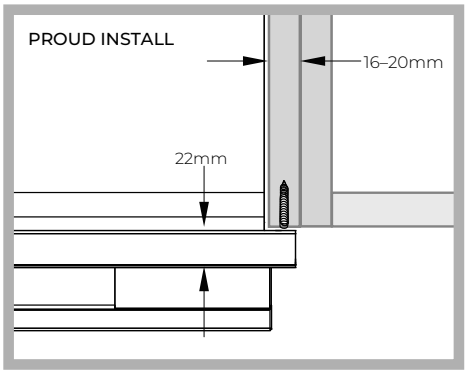

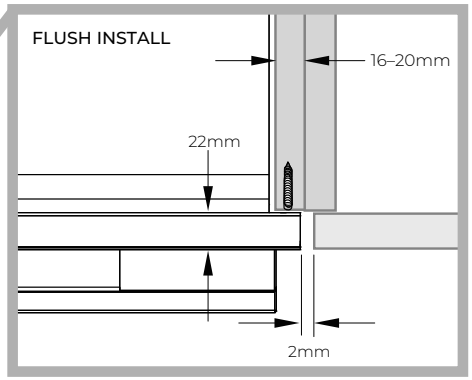

CABINETRY DIMENSIONS		OS60 MODELS
		mm
I	Minimum inside width of cavity	560
J	Overall width of cabinetry	600
K	Minimum inside height of cavity	470
L	Overall height of cabinetry	480
M	Minimum inside depth of cavity	560
n	Ventilation air vent	50
o	Height of trim kit	20

Note: if installing a cooktop above the oven, ensure adequate clearance is provided for the cooktop as per the cooktop manufacturer's instructions.

6 ELECTRICAL HOOK-UP

Before connecting to the electricity, make sure that the:

- specifications of the electrical system match with what is detailed on the serial number plate applied to the front of the oven.
- system has an effective earth connection compliant with current standards and laws.

The earth connection is required by law. The cable must not, at any point, reach a temperature greater than 50°C above room temperature.
This oven must be connected to the electricity through a power supply cable and plug that is compatible with the outlet of the electrical system that powers this oven. If a fixed appliance does not have a power cord and plug, or another device that ensures disconnection from the mains, with an opening distance of the contacts that allows complete disconnection, such disconnection devices must be provided in the power supply mains conforming to the installation rules.
The omnipolar socket or switch must be easy to reach when the appliance is installed.

Note: the manufacturer declines all liability if the usual accident prevention standards and the above instructions are not followed.

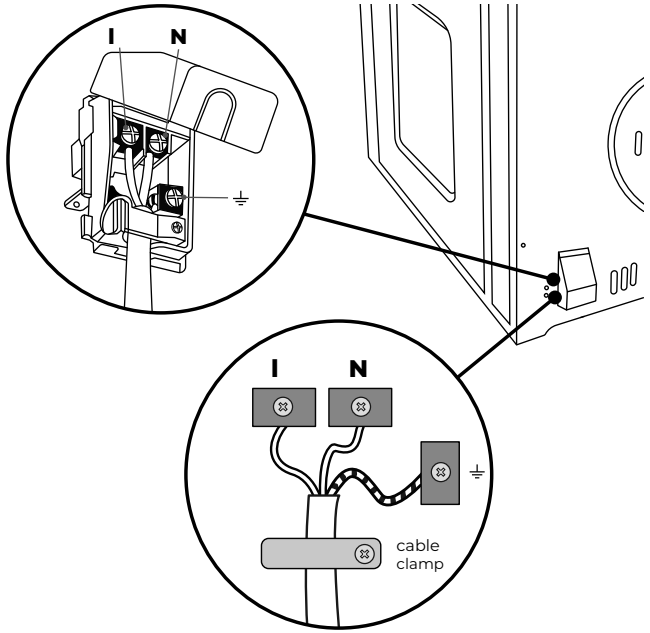

MAX POWER	HZ	VOLTAGE (V)	AMPS (A)
3200	50 Hz	220-240V	14.5

TYPE AND MINIMUM DIAMETER OF THE CABLES			
		SASO	
H05RR-F	3x1,5 mm²	H05RR-F	3x2,5 mm²
H05VV-F	3x1,5 mm²	H05VV-F	3x2,5 mm²
H05RN-F	3x1,5 mm²	H05RN-F	3x2,5 mm²
H05V2V2-F	3x1,5 mm²	H05V2V2-F	3x2,5 mm²

7 SECURE THE OVEN TO THE CABINETRY

1 Position the oven in the prepared cavity.

IMPORTANT!
Do not lift the oven by the door handle.

2 Use the supplied screws and spacers to secure the oven to the cabinetry.

IMPORTANT!

- **Do not over-tighten the screws.**
- **Take care not to damage the lower trim of the oven.**
- **Do not seal the oven into the cabinetry with silicone or glue. This makes future servicing difficult. Fisher & Paykel will not cover the costs of removing the oven, or of damage caused by this removal.**

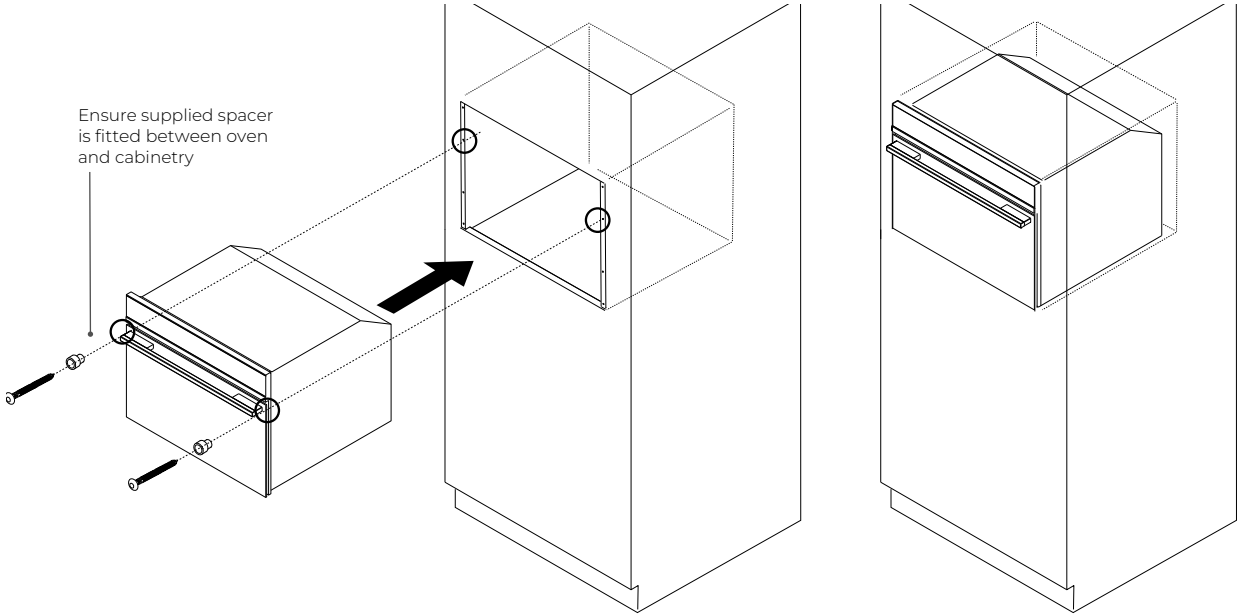

8 FINAL CHECKLIST

✓ **TO BE COMPLETED BY THE INSTALLER**

- ☐ Make sure the oven is level and securely fitted to the cabinetry.
- ☐ Check the lower trim is undamaged.
- ☐ Open the (lower) oven door slowly until it is fully open and check there is adequate clearance between the bottom of the door and the lower trim.
  This is to ensure correct air circulation. Should the lower trim become damaged, straighten the trim and ensure the oven door opens fully without obstruction.
- ☐ Make sure any cable ties and internal packaging has been removed from the oven cavity.
- ☐ Make sure all oven vents and openings are clear and free of any obstruction or damage.

IMPORTANT!
Failure to make sure all oven vents are clear may result in poor product performance.

- ☐ Make sure the isolating switch is accessible by the customer.

TEST OPERATION:

- ☐ Have you demonstrated the basic operation to the customer?
  Refer to User Guide.

Complete and keep for safe reference:

Model _____

Serial No. _____

Purchase Date _____

Purchaser _____

Dealer Address _____

Installer's Name _____

Installer's Signature _____

Installation Company _____

Installation Date _____

MICROWAVE OVEN

OM60 models

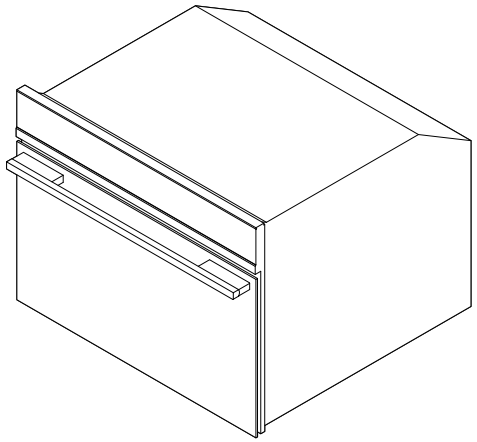

Installation

⚠ WARNING!



Electrical Shock Hazard
Before carrying out any work on the electrical section of the appliance, it must be disconnected from the mains electricity supply.
Connection to a good earth wiring system is absolutely essential and mandatory.
Alterations to the domestic wiring system must only be made by a qualified electrician
Failure to follow this advice may result in electrical shock or death.

⚠ WARNING!



Fire Hazard
Do not use adapters, reducers, or branching devices to connect this appliance to the mains power supply.
Failure to follow this advice may result in overheating, burning, or fire.

⚠ WARNING!



Cut Hazard
Take care – some edges are sharp.
Failure to use caution could result in injury or cuts.

IMPORTANT!
The oven's identification plate is accessible when the appliance is installed.
This identification plate, which is visible when you open the door, shows all the information you will need when requesting replacement parts for the appliance.

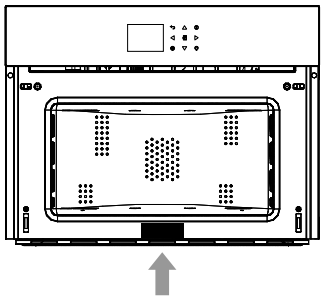

IMPORTANT SAFETY INSTRUCTIONS!

To avoid hazard, follow these instructions carefully before installing or using this appliance.

- **Save these instructions for the local inspectors use.**
- **Please make this information available to the person installing the appliance – doing so could reduce your installation costs.**
- **This oven is to be installed and connected to the electricity supply only by an authorised person.**
- **If the installation requires alterations to the domestic electrical system, call a qualified electrician. The electrician should also check that the socket cable section is suitable for the electricity drawn by the oven.**
- **The oven must be earthed.**
- **Installation must comply with your local building and electricity regulations.**
- **This appliance must be installed and connected to the mains power supply only by a suitably qualified person according to these installation instructions and in compliance with any applicable local building and electricity regulations. Failure to install the appliance correctly could invalidate any warranty or liability claims.**
- **If the power supply cable is damaged, it must be replaced by the manufacturer, its service agent or similarly qualified person in order to avoid a hazard.**
- **A circuit breaker is recommended.**
- **Do not use adaptors, reducers or branching devices to connect the oven to the mains electricity supply, as they can cause overheating and burning.**
- **Do not allow children and animals to stop or linger near the appliance when it is pulled out of the cabinet.**

Electrical requirements

- **Connect oven with copper wire only.**
- **Do not cut the conduit.**
- **A U.L. listed conduit connector must be provided at the junction box.**
- **Do not earth to a gas pipe.**
- **Do not have a fuse in the earthed or neutral circuit.**
- **Fuse both sides of the line.**
- **A time delay fuse or circuit breaker is recommended. If using a time delay fuse, then fuse both sides of the line.**
- **Flexible armored cable from the appliance should be connected directly to the junction box.**
- **Connect directly to the fused disconnect (or circuit breaker box) through flexible, armored or non-metallic sheathed, copper cable (with earthed wire).**
- **If codes permit and a separate earthed wire is used, it is recommended that a qualified electrician determine that the earthed path and wire gauge are in accordance with local codes.**

IMPORTANT!
SAVE THESE INSTRUCTIONS

2 PRIOR TO INSTALLATION

- The countertop and oven cavity are square and level, and are the required dimensions.
- The installation will comply with all clearance requirements and applicable standards and regulations.
- The isolating switch will be easily accessible to the customer with the oven installed.
- The electrician provides sufficient free length of power supply cable to reach from the bottom rear of the cavity to at least 1.5m in front of the bottom edge of the opening.
- The cable may enter the cavity from the side, top or bottom, but top entry must be at the rear of the cavity.
- The oven connection socket (if fitted) is outside the cavity if the oven is flush to the rear wall.
- The oven will rest on a surface that can support its weight.
- The height from the floor suits the customer.
- You consult local building authorities and by-laws if in doubt regarding installation.

IMPORTANT!

Some environmental factors and cooking habits can cause condensation in and around the oven during use. To protect surrounding cabinetry from possible damage caused by frequent or excessive condensation, we recommend moisture-proofing the oven cavity.

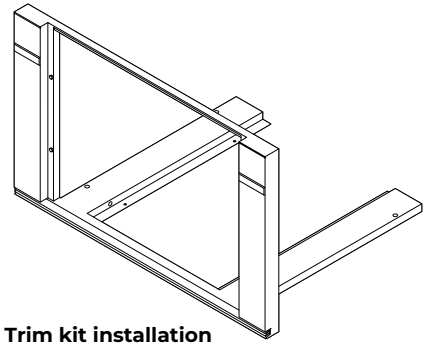

Optional Trim kit installation
If you are using a 762mm trim kit, refer to the separate Trim Kit Installation Guide.

3 AFTER INSTALLATION

IMPORTANT!

Take extra care not to damage the lower trim of the oven during installation. The trim is important for correct air circulation and allows the door to open and close without obstruction. The manufacturer does not accept any responsibility for damage resulting from incorrect installation.

- The oven door(s) can open fully without obstruction.
- The power supply cable does not touch any hot metal parts.
- The isolating switch is easily accessible to the customer with the oven installed.
- You complete the ‘Final checklist’ at the end of the installation.
- If, after following the instructions given, correct performance cannot be achieved, please contact your nearest Fisher & Paykel Authorised Service Center, Customer Care, or contact us through our local website listed at the end of this document.

4 PRODUCT DIMENSIONS

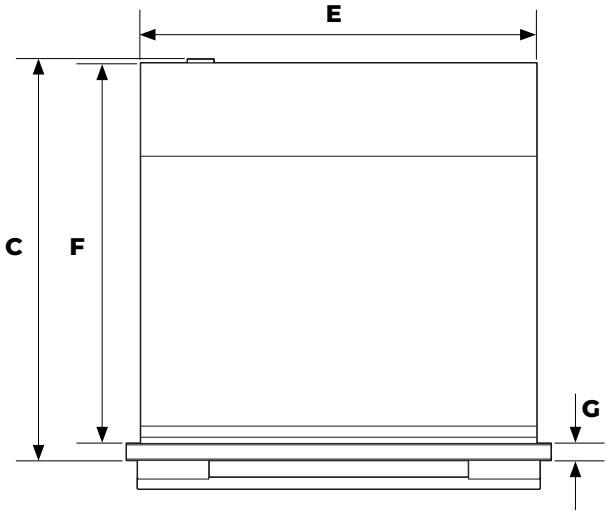

TOP

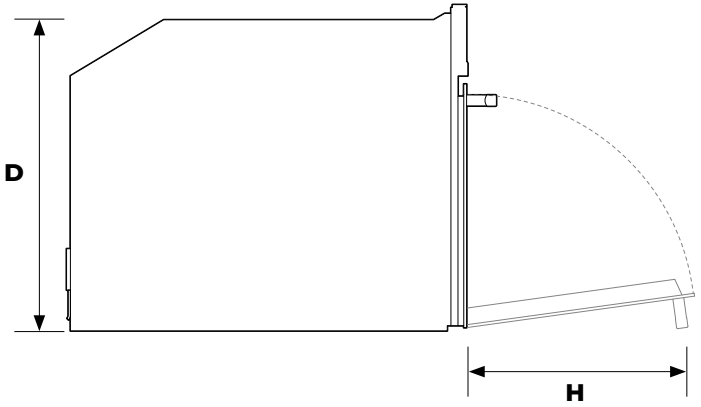

SIDE



FRONT

PRODUCT DIMENSIONS		OM60 MODELS
		mm
A	Overall height of product	458
B	Overall width of product	596
C	Overall depth of product (excluding handle and dials)	562
D	Height of chassis	445
E	Width of chassis	556
F	Depth of chassis	540
G	Depth of oven frame and control panel (=distance between front of chassis and front of oven door, excl. knobs)	22
H	Depth of oven door when fully open (measured from front of control panel)	320

5A CABINETRY DIMENSIONS (460mm HIGH CAVITY)

- The oven can be installed under a cooktop, in a column
- The cabinet material must be able to withstand heat.
- The oven must be centered within the walls of the cabinet and fixed with the screws and bushings that are provided.

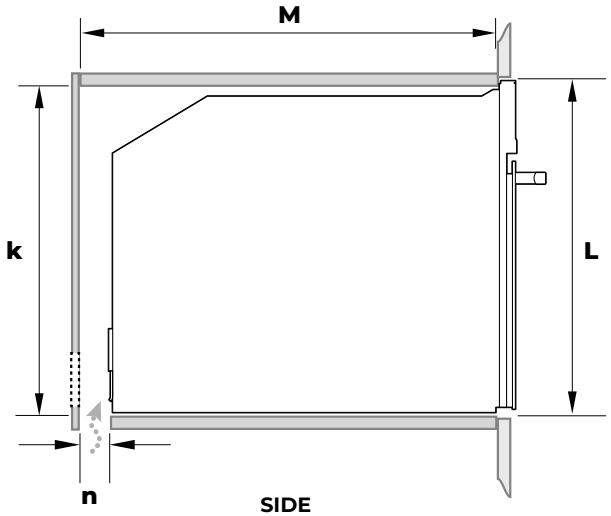

SIDE

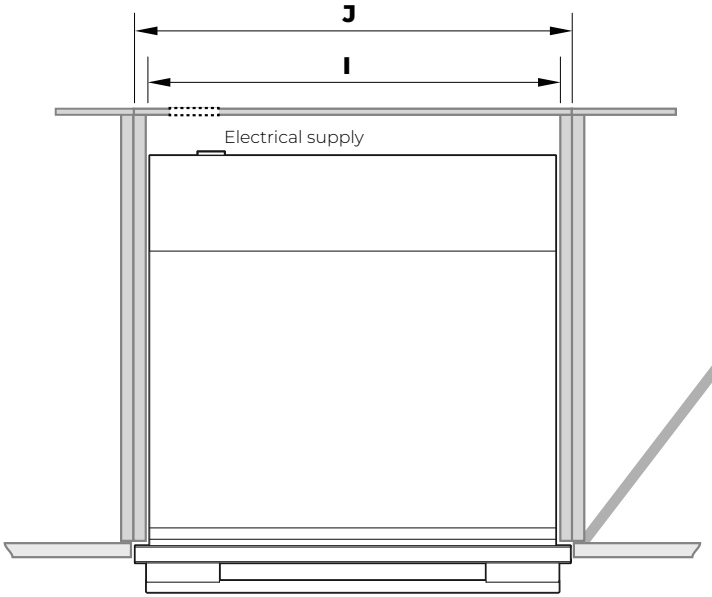

TOP

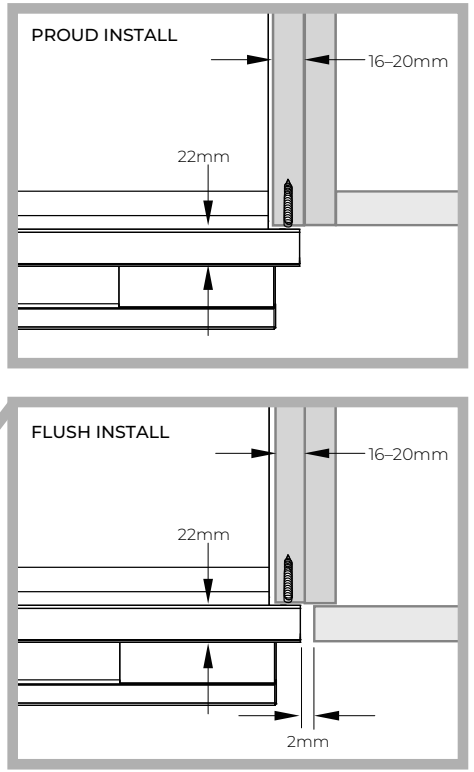

CABINETRY DIMENSIONS		OM60 MODELS
		mm
I	Minimum inside width of cavity	560
J	Overall width of cabinetry	600
K	Minimum inside height of cavity	450
L	Overall height of cabinetry	460
M	Minimum inside depth of cavity	560
n	Ventilation air vent	50

Note: if installing a cooktop above the oven, ensure adequate clearance is provided for the cooktop as per the cooktop manufacturer's instructions.

5B CABINETRY DIMENSIONS (480mm CAVITY TRIM KIT)

- The oven must be installed under a cook top, in a column.
- The cabinet material must be able to withstand heat.
- The oven must be centered within the walls of the cabinet and fixed with the screws and bushings that are provided.

To install the trim kit, refer to the instructions which accompany it.

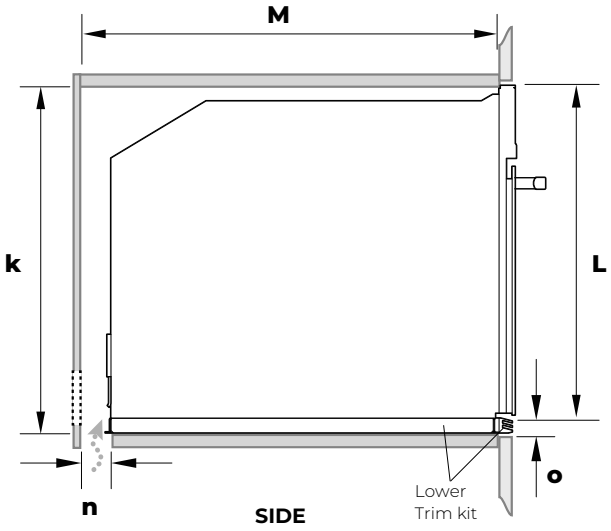

SIDE

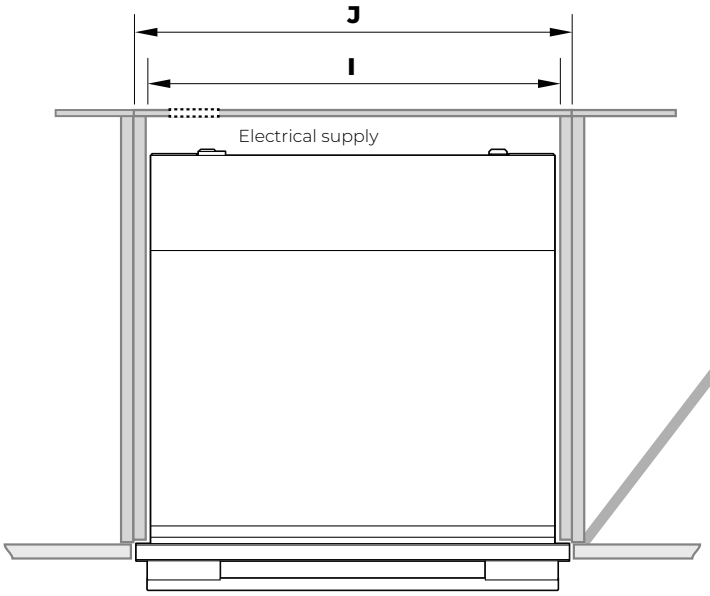

TOP

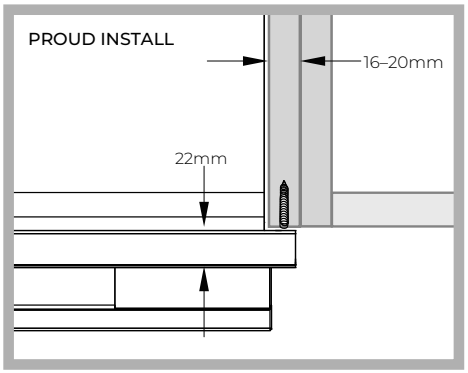

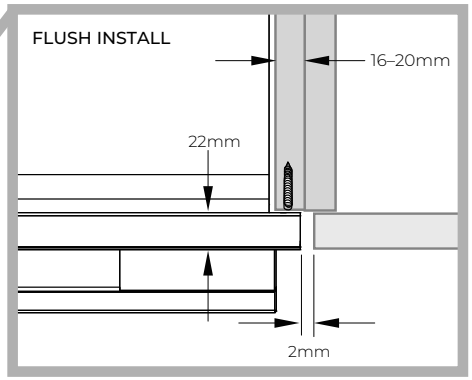

CABINETRY DIMENSIONS		OM60 MODELS
		mm
I	Minimum inside width of cavity	560
J	Overall width of cabinetry	600
K	Minimum inside height of cavity	470
L	Overall height of cabinetry	480
M	Minimum inside depth of cavity	560
n	Ventilation air vent	50
o	Height of trim kit	20

Note: If installing a cooktop above the oven, ensure adequate clearance is provided for the cooktop as per the cooktop manufacturer's instructions.

6 ELECTRICAL HOOK-UP

Before connecting to the electricity, make sure that the:

- specifications of the electrical system match with what is detailed on the serial number plate applied to the front of the oven.
- system has an effective earth connection compliant with current standards and laws.

The earth connection is required by law. The cable must not, at any point, reach a temperature greater than 50°C above room temperature.
This oven must be connected to the electricity through a power supply cable and plug that is compatible with the outlet of the electrical system that powers this oven. If a fixed appliance does not have a power cord and plug, or another device that ensures disconnection from the mains, with an opening distance of the contacts that allows complete disconnection, such disconnection devices must be provided in the power supply mains conforming to the installation rules.
The omnipolar socket or switch must be easy to reach when the appliance is installed.

Note: the manufacturer declines all liability if the usual accident prevention standards and the above instructions are not followed.

MAX POWER	HZ	VOLTAGE (V)	AMPS (A)
3200	50 Hz	220-240V	14.5

TYPE AND MINIMUM DIAMETER OF THE CABLES			
		SASO	
H05RR-F	3x1,5 mm²	H05RR-F	3x2,5 mm²
H05VV-F	3x1,5 mm²	H05VV-F	3x2,5 mm²
H05RN-F	3x1,5 mm²	H05RN-F	3x2,5 mm²
H05V2V2-F	3x1,5 mm²	H05V2V2-F	3x2,5 mm²

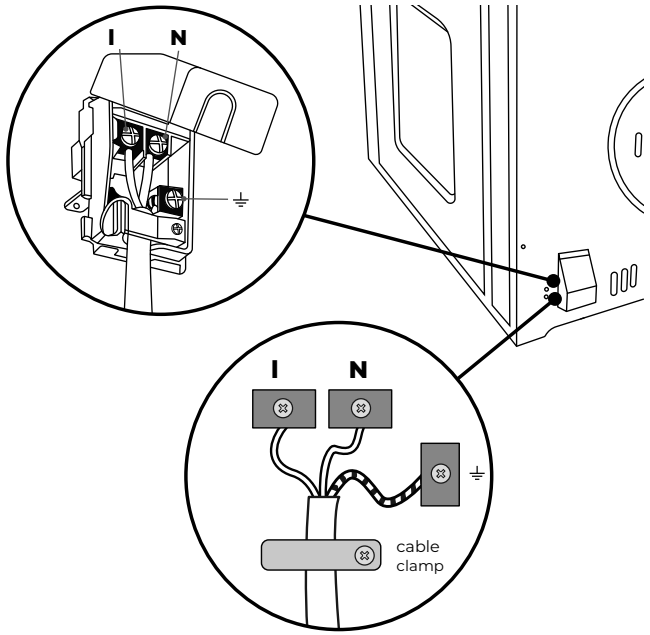

7 SECURE THE OVEN TO THE CABINETRY

1 Position the oven in the prepared cavity.

IMPORTANT!
Do not lift the oven by the door handle.

2 Use the supplied screws and spacers to secure the oven to the cabinetry.

IMPORTANT!

- **Do not over-tighten the screws.**
- **Take care not to damage the lower trim of the oven.**
- **Do not seal the oven into the cabinetry with silicone or glue. This makes future servicing difficult. Fisher & Paykel will not cover the costs of removing the oven, or of damage caused by this removal.**

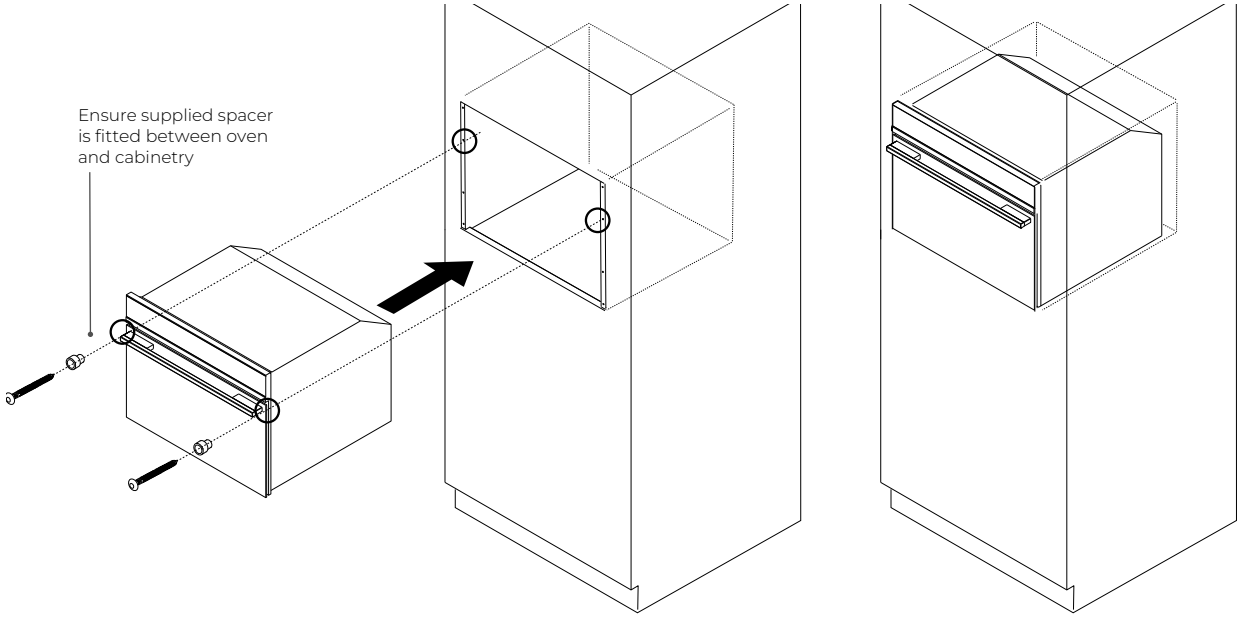

8 FINAL CHECKLIST

✓ **TO BE COMPLETED BY THE INSTALLER**

- ☐ Make sure the oven is level and securely fitted to the cabinetry.
- ☐ Check the lower trim is undamaged.
- ☐ Open the oven door (lower) slowly until it is fully open and check there is adequate clearance between the bottom of the door and the lower trim.
  This is to ensure correct air circulation. Should the lower trim become damaged, straighten the trim and ensure the oven door opens fully without obstruction.
- ☐ Make sure any cable ties and internal packaging has been removed from the oven cavity.
- ☐ Make sure all oven vents and openings are clear and free of any obstruction or damage.

IMPORTANT!
Failure to make sure all oven vents are clear may result in poor product performance.

- ☐ Make sure the isolating switch is accessible by the customer.

TEST OPERATION:

- ☐ Have you demonstrated the basic operation to the customer?
  Refer to User Guide.

Complete and keep for safe reference:

Model _____

Serial No. _____

Purchase Date _____

Purchaser _____

Dealer Address _____

Installer's Name _____

Installer's Signature _____

Installation Company _____

Installation Date _____

FISHERPAYKEL.COM

© Fisher and Paykel Appliances 2020. All rights reserved.
The appliance specifications in this document apply to the specific appliances and models described at the date of issue. Under our policy of continuous appliance improvement, these specifications may change at any time. You should therefore check with your Dealer to ensure this document correctly describes the appliance currently available.

For current details about model and specification availability in your country, go to our website fisherpaykel.com or contact your local Fisher & Paykel dealer.