FISHER & PAYKEL

INTEGRATED COLUMNS

RS4621F, RS6121F, RS7621F,
RS6121S & RS7621S models

INSTALLATION GUIDE

NZ AU GB EU

CONTENTS

1 SAFETY AND WARNINGS

2 INTEGRATED COLUMNS

3 COMPONENTS

4 TOOLS

5 DUAL INSTALL OPTIONS

6 APPLIANCE DIMENSIONS AND SPECIFICATIONS

7 CABINETRY OPTIONS

8 CAVITY DIMENSIONS

9 DOOR AND TOE KICK PANEL DIMENSIONS

!0 CUSTOM DOOR PANEL DIMENSIONS

!1 DOOR CLEARANCE

!2 ELECTRICAL AND PLUMBING DIMENSIONS

!3-A ELECTRICAL AND PLUMBING SPECIFICATIONS (FOR NZ & AU ONLY) OR !3-B ELECTRICAL AND PLUMBING SPECIFICATIONS (FOR GB & EU ONLY)

!4 BEFORE INSTALLATION

!5 CAVITY PREPARATION

!6-A WATER AND POWER SUPPLY CONNECTION (FOR NZ & AU ONLY) OR !6-B WATER AND POWER SUPPLY CONNECTION (FOR GB & EU ONLY)

!7 SINGLE INSTALLATION

!8 DUAL INSTALLATION

!9 WATER FILTER INSTALLATION

@0 DOOR PANEL INSTALLATION (STAINLESS STEEL)

@1 DOOR PANEL INSTALLATION (CUSTOM)

@2 TOE KICK INSTALLATION

@3 CABINET TRIMS INSTALLATION

@4 DOOR TRIMS INSTALLATION

@5 OPTIONAL — CHANGING OVER DOOR HINGES

@6 FINAL CHECKLIST

IMPORTANT!

SAVE THESE INSTRUCTIONS

The models shown in this installation guide may not be available in all markets and are subject to change at any time. For current details about model and specification availability in your country, go to our website fisherpaykel.com or contact your local Fisher & Paykel dealer.

1 SAFETY AND WARNINGS

⚠ WARNING!



Electric Shock Hazard
Read and follow the safety and warnings outlined in this installation guide before operating this appliance.
Failure to do so can result in death, electric shock, fire or injury to persons.

⚠ WARNING!



Cut Hazard
Take care — panel edges are sharp.
Failure to use caution could result in injury or cuts.

⚠ WARNING!



This appliance is top-heavy and must be secured to prevent the possibility of tipping forward.
To ensure that the appliance is stable under all loading conditions, the anti-tip bracket and fittings supplied must be installed according to the following installation steps by a professional installer.

2 INTEGRATED COLUMNS

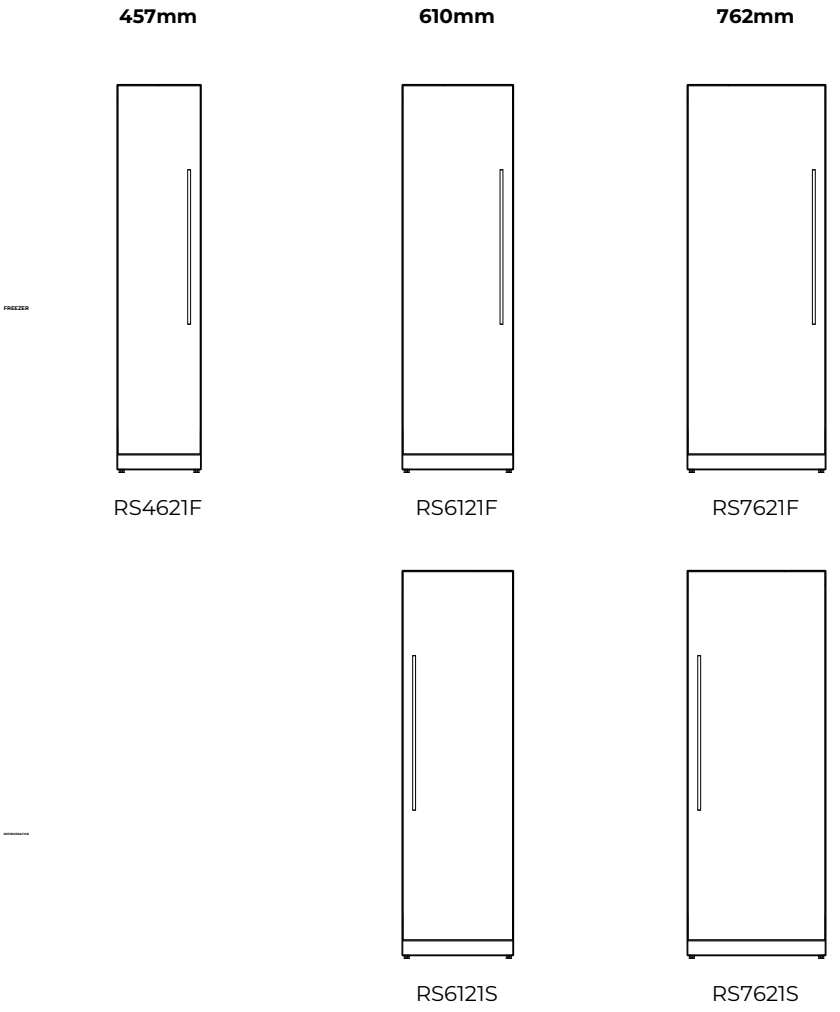

Note: Interchangeable door hinges available for each model.

3 COMPONENTS

Installation kit
Packaged in box located inside the appliance

Door panel attachment kit



Side bracket
(6)



Bracket slider
(6)



Side spacer bracket
(6)

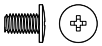

For SS door panels:
8Gx16 Mush washer screw (30)



For Custom door panels:
M5x12 Cross-head screw (30)

Miscellaneous components

Each supplied separately

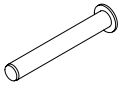

Hinge limiting pin
(3)



Air toe kick seal
(1)

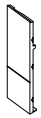

Flow divider cap
(1)



Filter cartridge tool
(1)

Anti-tip bracket assembly kit



Anti-tip bracket
(1)



Masonry plug
(4)

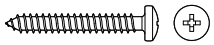

10-12x35mm cross-head screw
(5)

Install fasteners kit

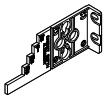

Cabinet depth alignment gauge
(4)

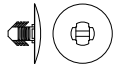

Barbed plug
(2)



8Gx16 Countersunk screw
(7)

Miscellaneous items pack
Located inside the appliance



User guide
(1)



Service & Warranty
(1)



Installation guide
(1)

Install parts
Supplied and taped to the back of the appliance



Door panel side extrusion
(2)

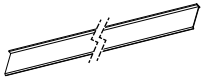

Cabinet side trim assembly
(1)

Toe kick install kit
Not supplied and must be purchased separately



Toe kick
(1)

- Standard toe kick height is 102mm for standard stainless steel door panel.
- For Custom door panel installation, a toe kick 50-152mm must be fitted and adjusted accordingly.
- An extra bottom grille is required for a 50mm toe kick installation.

Water filter install kit (for NZ & AU only)
(included in Miscellaneous items pack of Freezer models only)



Collet locking clip
(1)



Water filter
(1)



1/2 BSP Stainless steel braided hose with adaptor (1)

Water filter install kit (for GB & EU only)
(included in Miscellaneous items pack of Freezer models only)



Collet locking clip
(1)

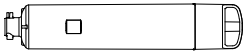

Water filter
(1)



3/4” (19mm) BSP water fitting
(1)



1/4” (6.4mm) plastic tubing
(1)

3 COMPONENTS

Dual install joiner kit (CA: 25328)
Used to install two appliances (refrigerator and freezer) side by side.
Located in Freezer models only. Taped to the back of the freezer.
Can be purchased separately through an authorised Fisher & Paykel dealer.
Visit fisherpaykel.com for more information.

Top joiner fastener kit

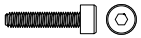

M5x20 Cap screw
(1)



M5x16x1 Plain washer
(1)

Bottom joiner fastener kit

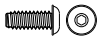

M6x16 Washer screw
(1)



M6x12x3.2 Plastic washer
(1)



M6 Hex nut
(1)

Top joiner bracket kit

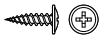

8Gx16 Mush washer screw
(2)

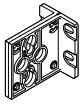

Central spacer
(1)

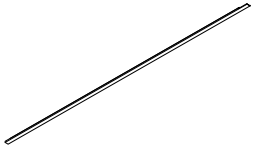

Centre trim assembly
(1)

Door panel set
Not supplied and must be purchased separately

Stainless steel door panel set:
(Fisher & Paykel)

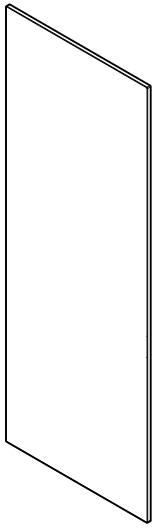

Applicable to refrigerator and freezer models.

Custom door panel set:
Supplied by customers to match their cabinetry.



Applicable to refrigerator and freezer models.

Door handle kit
Not supplied and must be purchased separately. Select between the options below:

Contemporary round handle kit (CA: 25324)

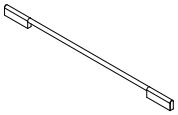

Contemporary round door handle
(1x)



M5x25 Hex screw
(4x)

Contemporary square handle kit (CA: 25322)

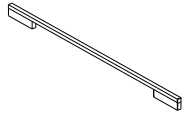

Contemporary square door handle
(1x)



M5x25 Hex screw
(4x)

3 COMPONENTS

Hinge change kit
Not included with the appliance and must be purchased separately



MODEL	LEFT HINGE TO RIGHT HINGE	RIGHT HINGE TO LEFT HINGE
RS46	848186	848185
RS61	848188	848187
RS76	848190	848189

Each kit includes: Hinge change assembly (1x), Top (fixed) grille assembly (1x)

Hinge change assembly

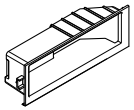

Hinge (right or left) top pocket
(2)

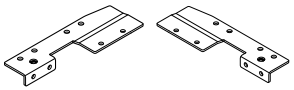

K05 top (right or left) adaptor bracket
(1)

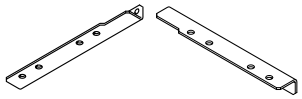

Bottom (right or left) adaptor bracket
(1)

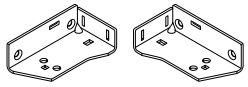

Bottom (right or left) hinge bracket
(1)

Top grille assembly

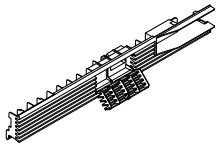

Top (fixed) grille
(1)

4 TOOLS

Required tools
Not included with appliance

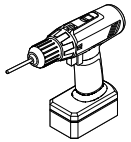

Powered driver

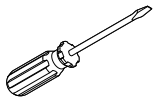

Flathead screwdriver



Ruler

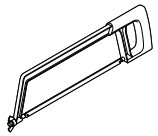

Hacksaw

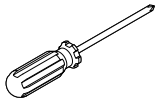

Cross-head screwdriver



Pencil

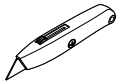

Cutter

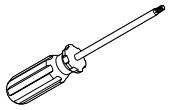

T2 star-head screwdriver

Supplied tools
Included in installation kit

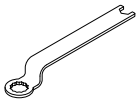

Spanner 13mm
(1)



Hex key
(1)

5 DUAL INSTALL OPTIONS

The following are options for dual installation with reference to the door opening range and partition (optional) between two appliance combinations.

IMPORTANT!

- **Beware of clashing (circled) when opening the doors. Use a hinge limiting pin to restrict door opening rotation to 90°. Refer to 'Door Clearance' (page 15) for more information.**
- **If installing a partition between two appliances, it must have enough clearance to ensure the doors/handles do not interfere with one another when opening or closing.**

NO PARTITION

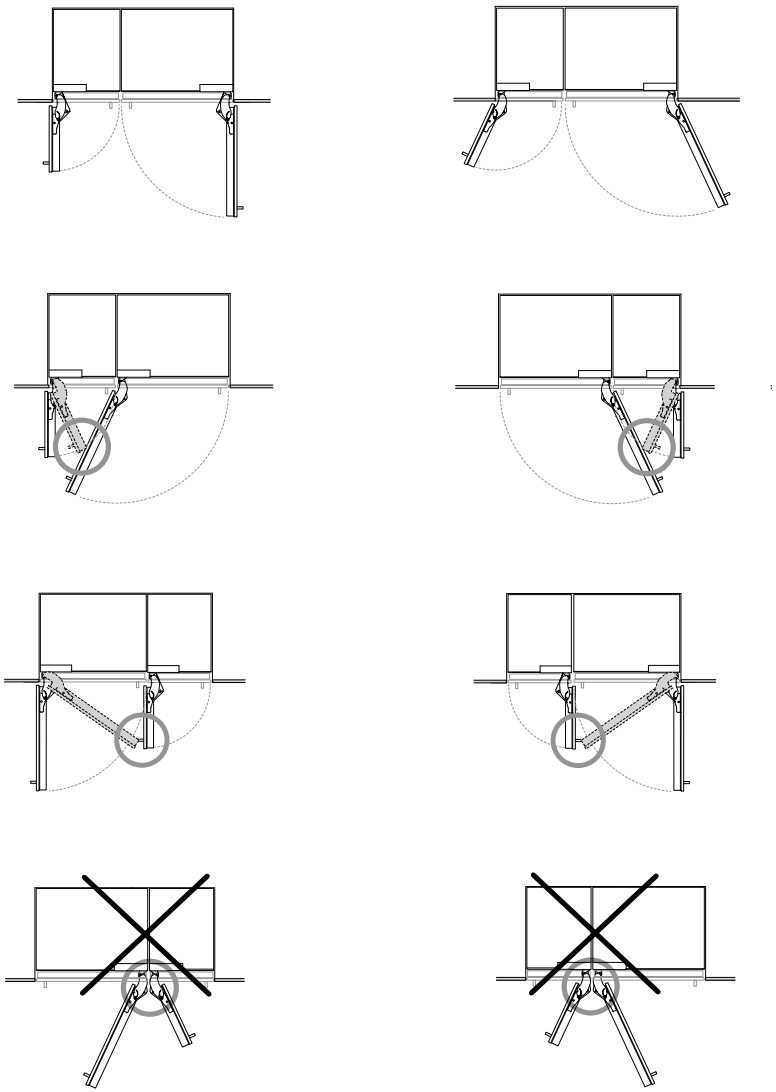

WITH PARTITION

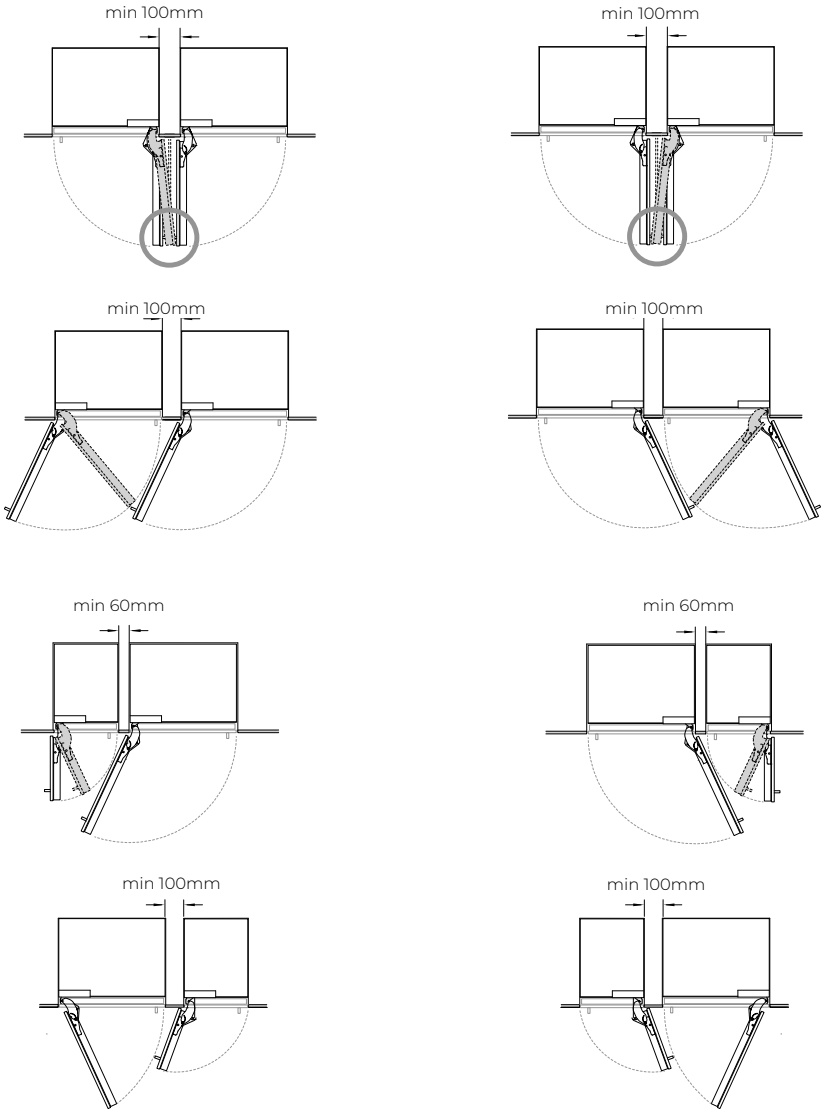

6 APPLIANCE DIMENSIONS AND SPECIFICATIONS

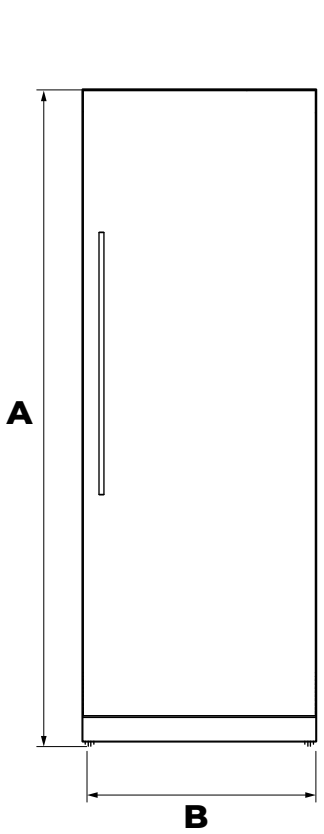

FRONT VIEW

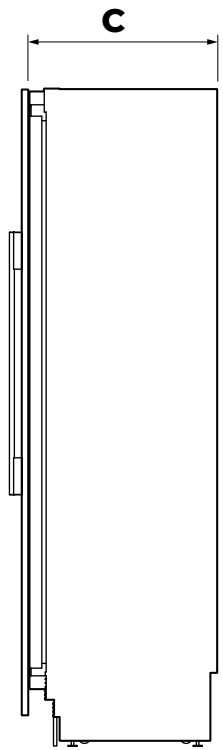

PROFILE VIEW

		RS46	RS61	RS76
APPLIANCE DIMENSIONS		**mm**	**mm**	**mm**
A	Overall height of appliance	2134	2134	2134
B	Overall width of appliance	451	603	756
C	Overall depth of appliance (excluding front door panel)	610	610	610
APPLIANCE SPECIFICATIONS				
	Door clearance	508	660	813
	Weight (including packaging)	118kg	137kg	156kg
	Door hinge	Hettich K05	Hettich K05	Hettich K05

FRAMELESS CABINETRY
Aligns the appliance/s with the cabinetry

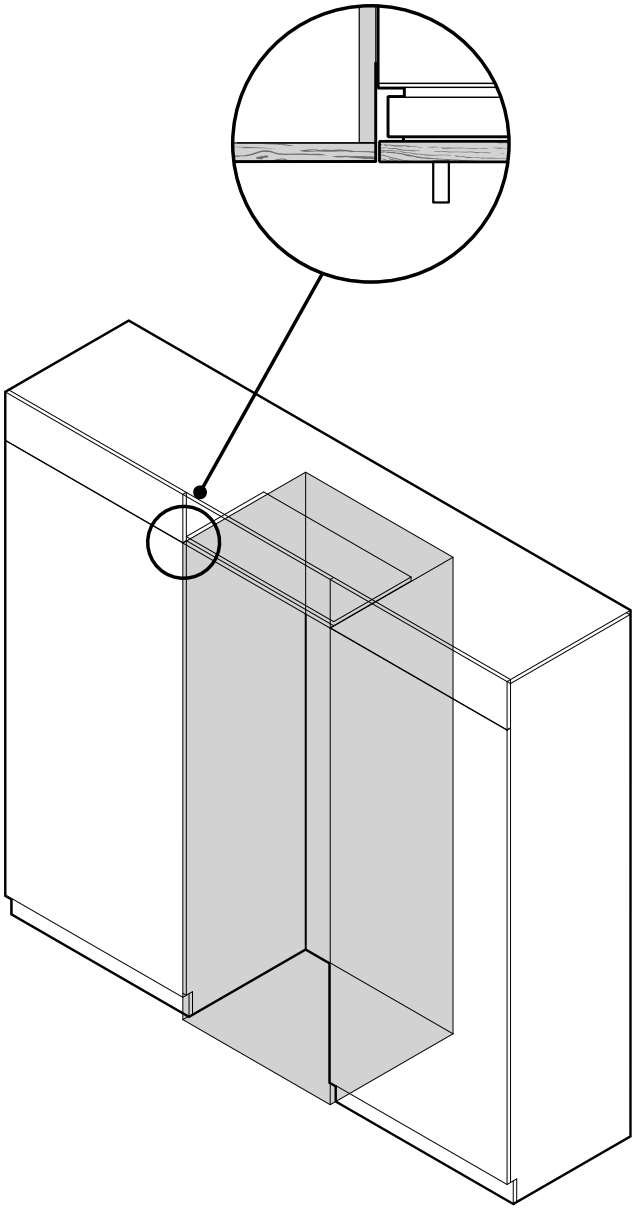

FRAMED CABINETRY
Aligns the appliance/s with the frame of the cabinetry

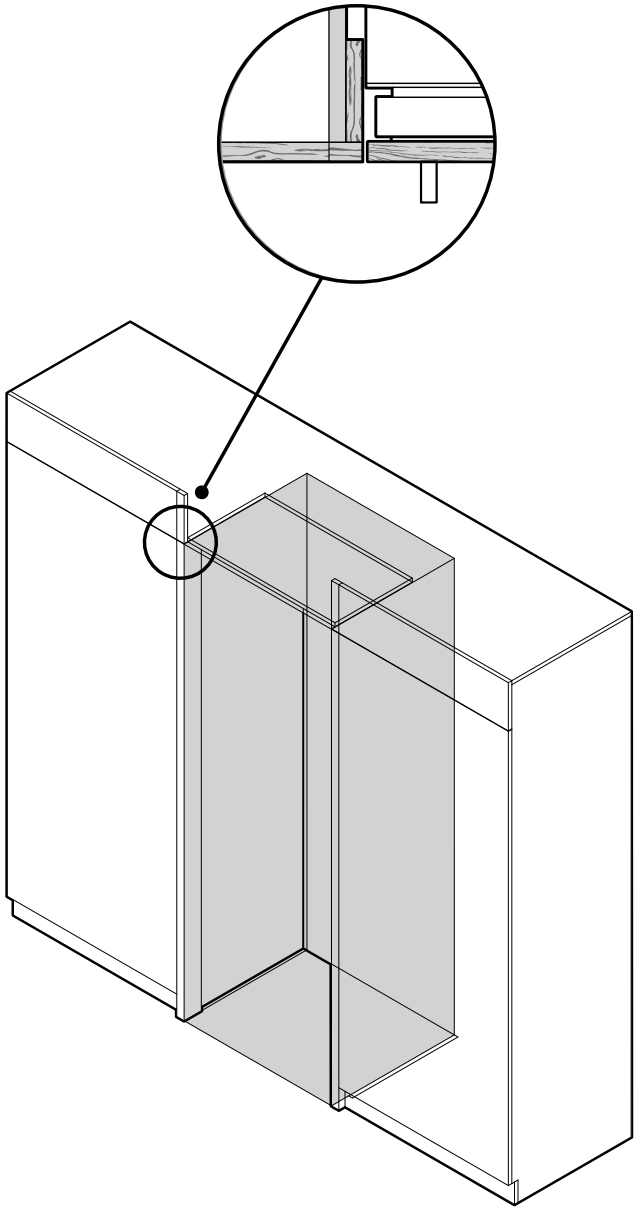

Note: Images shown for single install. These options are also applicable for dual install.

8 CAVITY DIMENSIONS

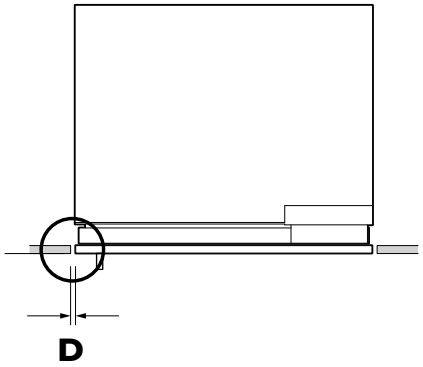

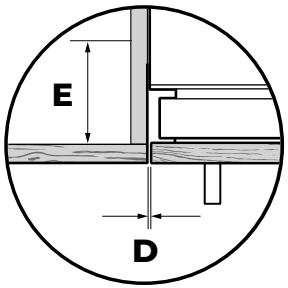

Frameless: finished return cavity sides and top

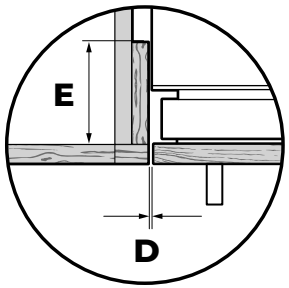

Framed: finished return cavity sides and top

PLAN VIEW

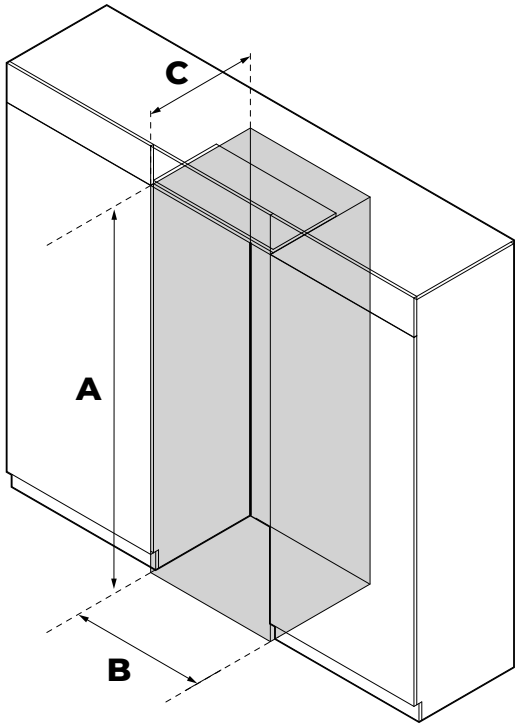

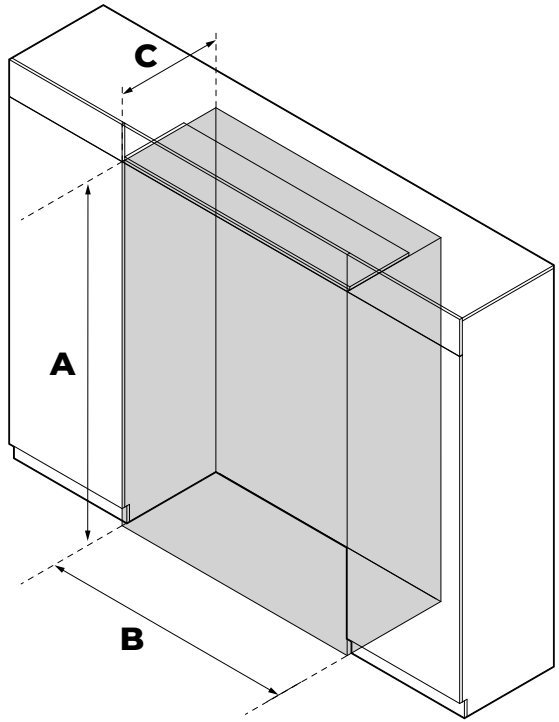

Note: These dimensions are intended for 'Flush Installation' only.

		SINGLE INSTALL			DUAL INSTALL				
		RS46	RS61	RS76	RS46 / RS61	RS46 / RS76	RS61 / RS61	RS61 / RS76	RS76 / RS76
CAVITY DIMENSIONS		mm	mm	mm	mm	mm	mm	mm	mm
A	Overall height of cavity	2134	2134	2134	2134	2134	2134	2134	2134
b	Overall width of cavity	457	610	762	1067	1219	1219	1372	1524
c	Minimum overall depth of cavity* if the plug is located in adjacent cabinet	635	635	635	635	635	635	635	635
	Minimum overall depth of cavity* if the plug is located behind the appliance	650	650	650	650	650	650	650	650
d	Minimum cabinetry gap clearance from edge of door panels	3	3	3	3	3	3	3	3
e	Minimum required finished return	102	102	102	102	102	102	102	102

* Assumes a door panel thickness of 19mm.

9 DOOR AND TOE KICK PANEL DIMENSIONS

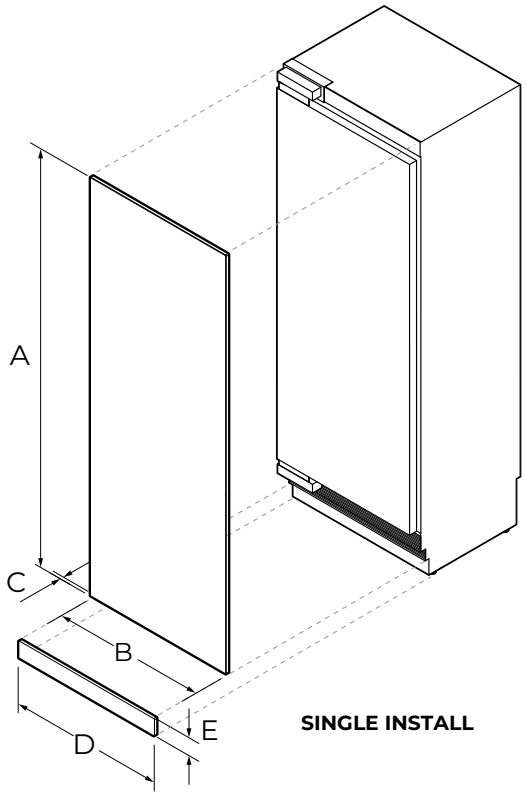

SINGLE INSTALL

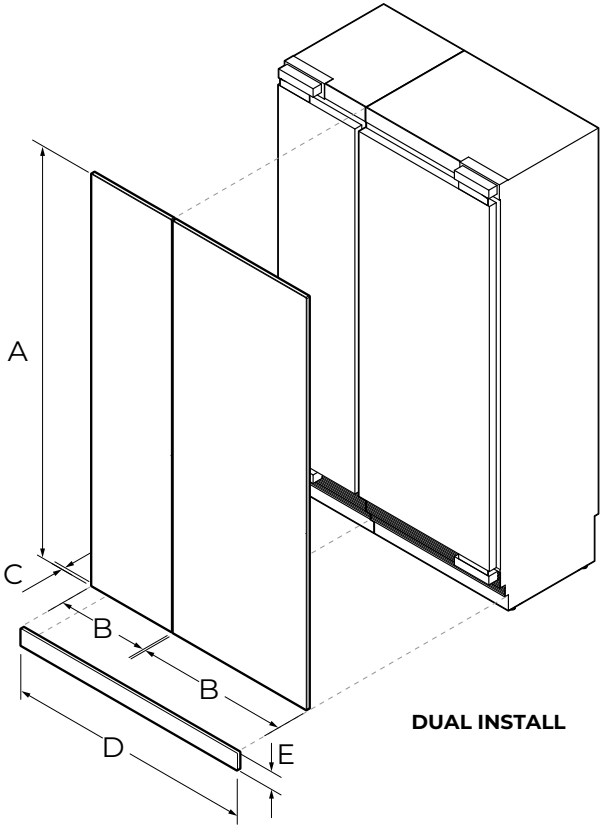

DUAL INSTALL

		RS46	RS61	RS76
DOOR PANEL DIMENSIONS (STAINLESS STEEL)		**mm**	**mm**	**mm**
A	Height of door panel	2029	2029	2029
B	Width of door panel	451	603	756
C	Depth of door panel (excluding door handle)	19	19	19
DOOR PANEL DIMENSIONS (CUSTOM)*				
A	Height of door panel	1978 – 2080	1978 – 2080	1978 – 2080
B	Width of door panel — single install	451	603	756
	Width of door panel — dual install	452	605	757.5
C	Depth of door panel	min 16 – max 25	min 16 – max 25	min 16 – max 25
DOOR PANEL WEIGHT		**kg**	**kg**	**kg**
	Maximum weight of Stainless steel/Custom door panel (including handle/brackets) †	20	25	30

* Custom door panels to be manufactured and fitted by cabinetmaker.

† Door handle kit is available as an optional accessory for both Stainless Steel door panels and Custom door panels and must be purchased separately.

DOOR AND TOE KICK PANEL DIMENSIONS

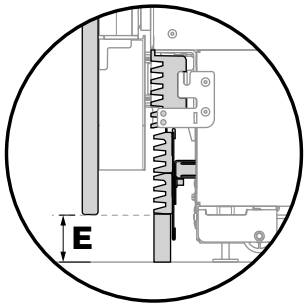

51mm toe kick height
(with extra lower grille attached)

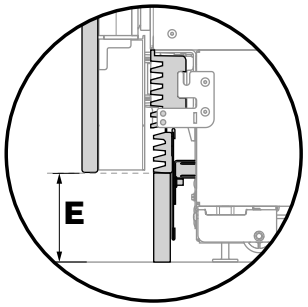

102mm toe kick height

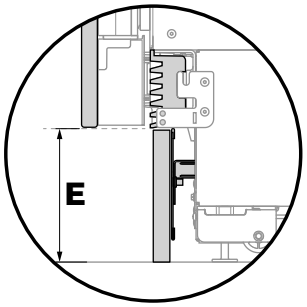

152mm toe kick height

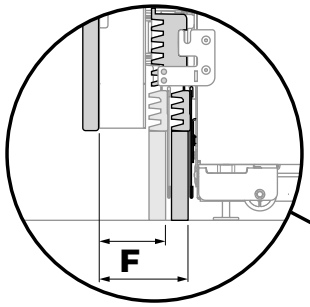

73 – 102mm toe kick depth
measured from the from
rear of door panel

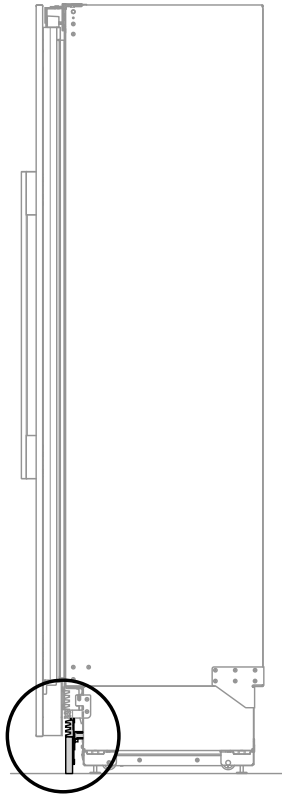

		SINGLE INSTALL			DUAL INSTALL				
		RS46	RS61	RS76	RS46 / RS61	RS46 / RS76	RS61 / RS61	RS61 / RS76	RS76 / RS76
TOE KICK DIMENSIONS		mm	mm	mm	mm	mm	mm	mm	mm
D	Width of toe kick								
	Stainless steel panel/Custom panel	454	606	759	1064	1216	1216	1368	1521
E	Height of toe kick#								
	Stainless steel panel	102	102	102	102	102	102	102	102
	Custom panel**	50 – 152	50 – 152	50 – 152	50 – 152	50 – 152	50 – 152	50 – 152	50 – 152
F	Depth of toe kick (measured from front of door)								
	Stainless steel panel/Custom panel	73 – 102	73 – 102	73 – 102	73 – 102	73 – 102	73 – 102	73 – 102	73 – 102

Standard toe kick height is 102mm with the optional Stainless door panel. For Custom door panel installation, a custom toe kick 50 – 152mm can be manufactured and fitted by cabinetmaker. The Custom door panel height needs to be adjusted accordingly.

** Extra lower grilles are required for a 50mm toe kick installation.

Custom door panel dimensions

Dimensions apply for the preparation and installation of Custom door panels. For Dwg and Dxf files of the below panel preparation download the folder on **thekitchentools.fisherpaykel.com.**

IMPORTANT!

- **The thickness of the custom door panel can vary provided that the screws do not penetrate beyond the full depth of the door panel. Refer to 'Door panel dimensions (Custom)' table on page 11 for thickness limitations of door panel.**
- **Measurements of screw hole locations can vary depending on the height of toe kick 50 – 152mm.**

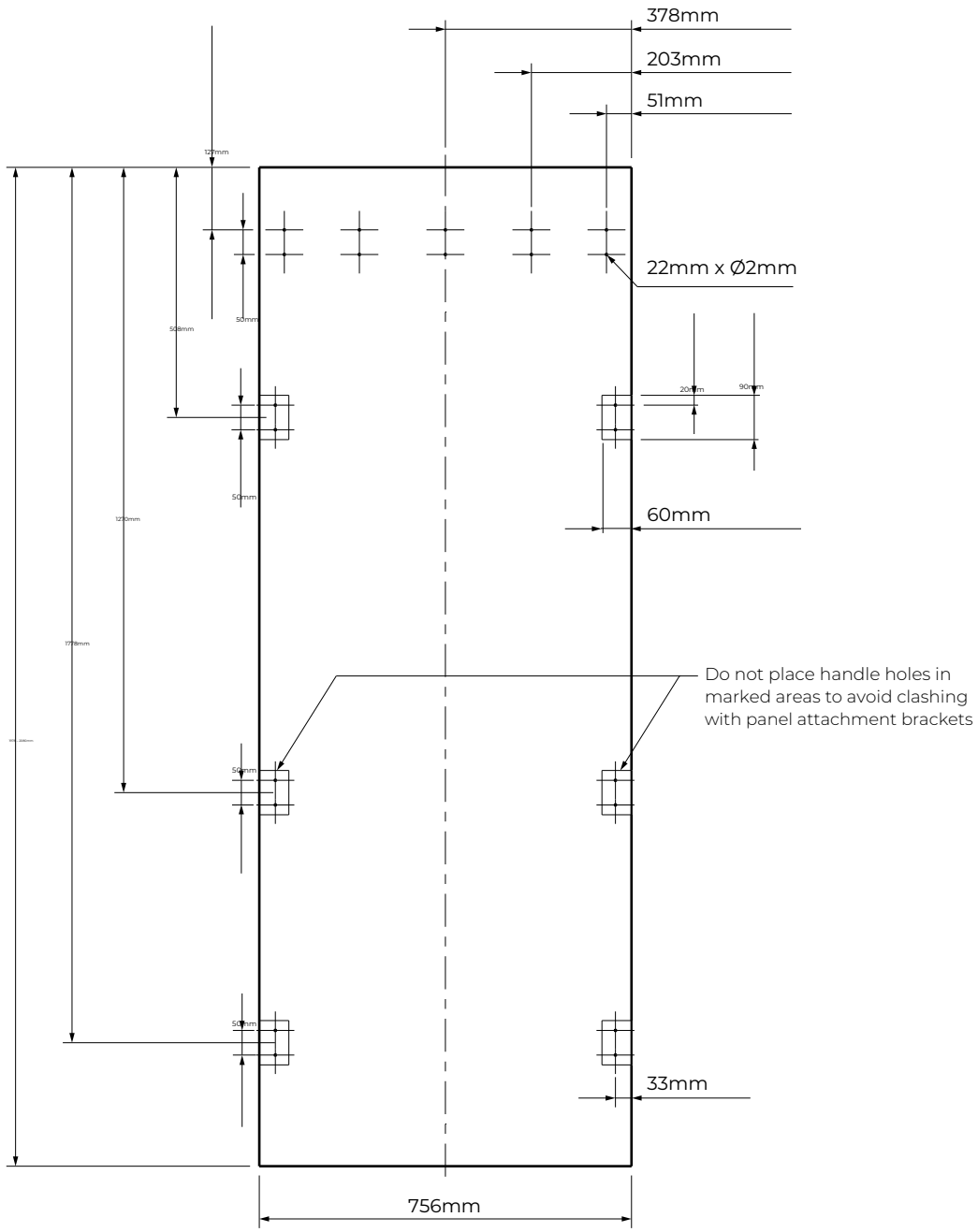

CUSTOM DOOR PANEL DIMENSIONS

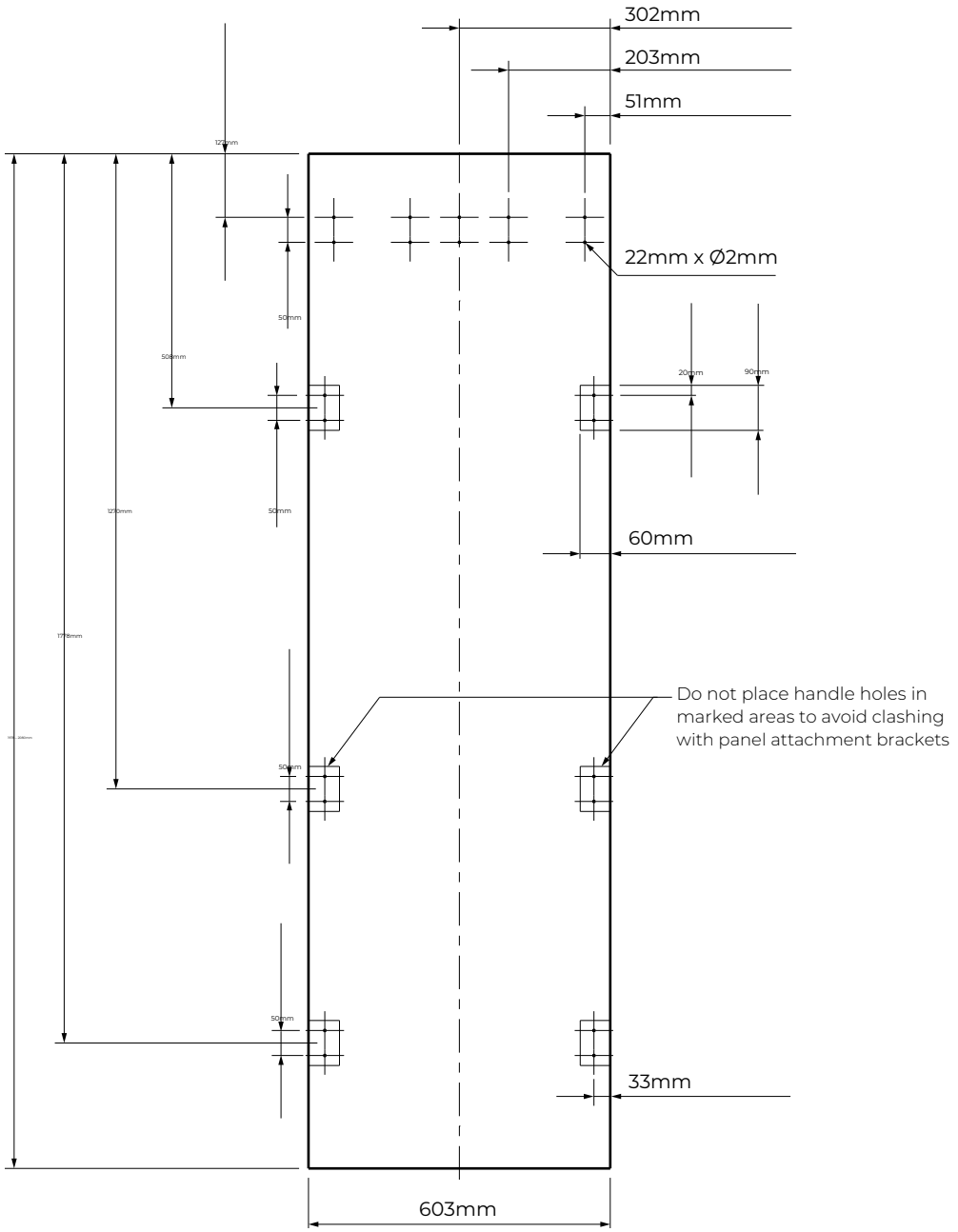

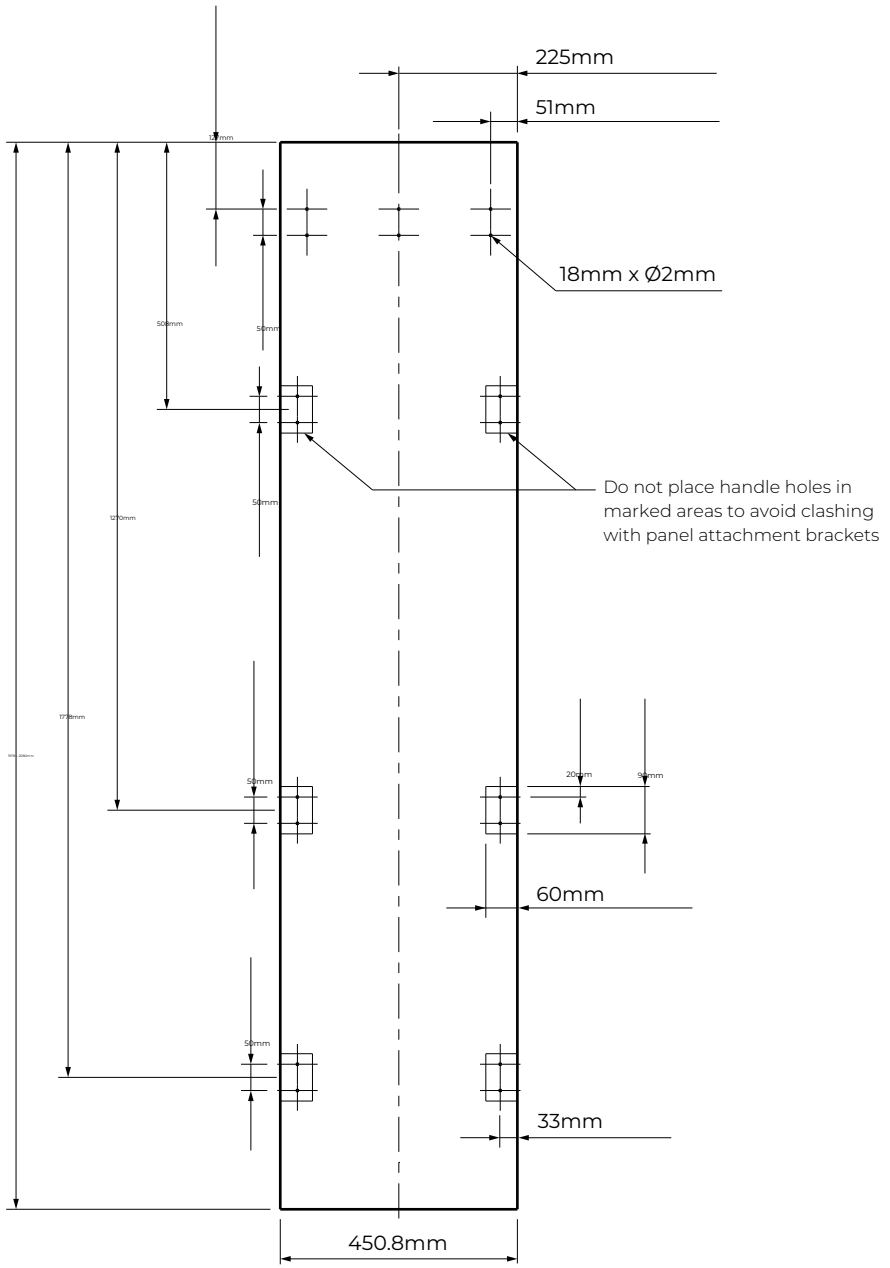

!1 DOOR CLEARANCE

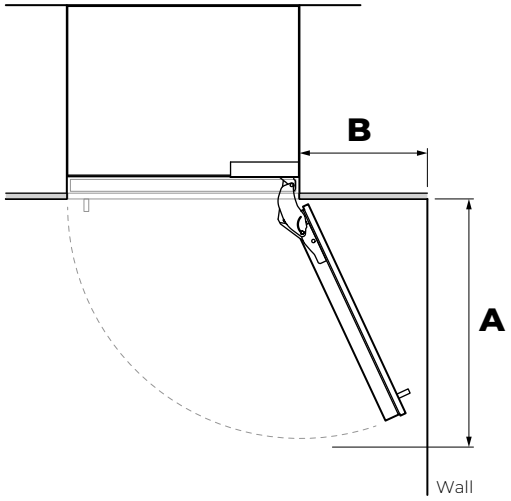

115° DOOR OPENING (FULL INTERNAL ACCESS)

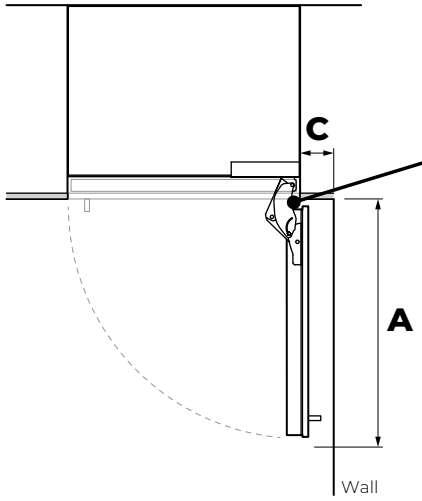

90° DOOR OPENING

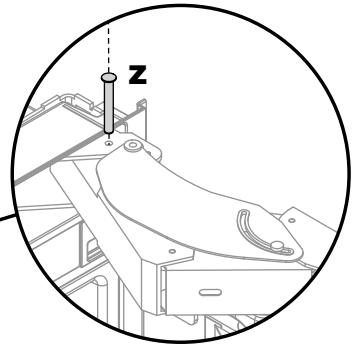

For 90° door swing a hinge limiting bolt is supplied with your appliance. This pin fits in the boreholes of the top hinge (**Z**).

WARNING!

- **Before opening the doors, ensure that the appliance is stable.**
- **Follow these steps to avoid risks that can cause serious injury or death.**

1 Open door to 90°.
2 Align the hinge limiting bolt vertically with the bore hole.
3 Insert the pin through the bore hole. Use a hammer to drive the pin through the hole.

		RS46	RS61	RS76
DOOR CLEARANCE DIMENSIONS		**mm**	**mm**	**mm**
A	Depth of door (90° open) measured from front of door	508	660	813
b	Minimum door clearance* to adjacent wall** (115° — full internal access)	292	356	419
c	Minimum door clearance* to adjacent wall** (90° — reduced internal access)	110	110	110

* Measured from front cabinetry edge.
** Does not include the Custom door panels or handles to be manufactured and fitted by a cabinetmaker.

ELECTRICAL AND PLUMBING DIMENSIONS

IMPORTANT!

- **Electrical and water connections for these appliances must be located in an adjacent area or unit (cabinet or cupboard) that is easily accessible in case of repair or disconnection.**
- **Once installed, the service technician will NOT remove the appliance from the cavity to gain access for repair.**

WARNING!

- **Electric shock hazard! Assume all parts live.**
- **Disconnect supply before servicing and installation.**

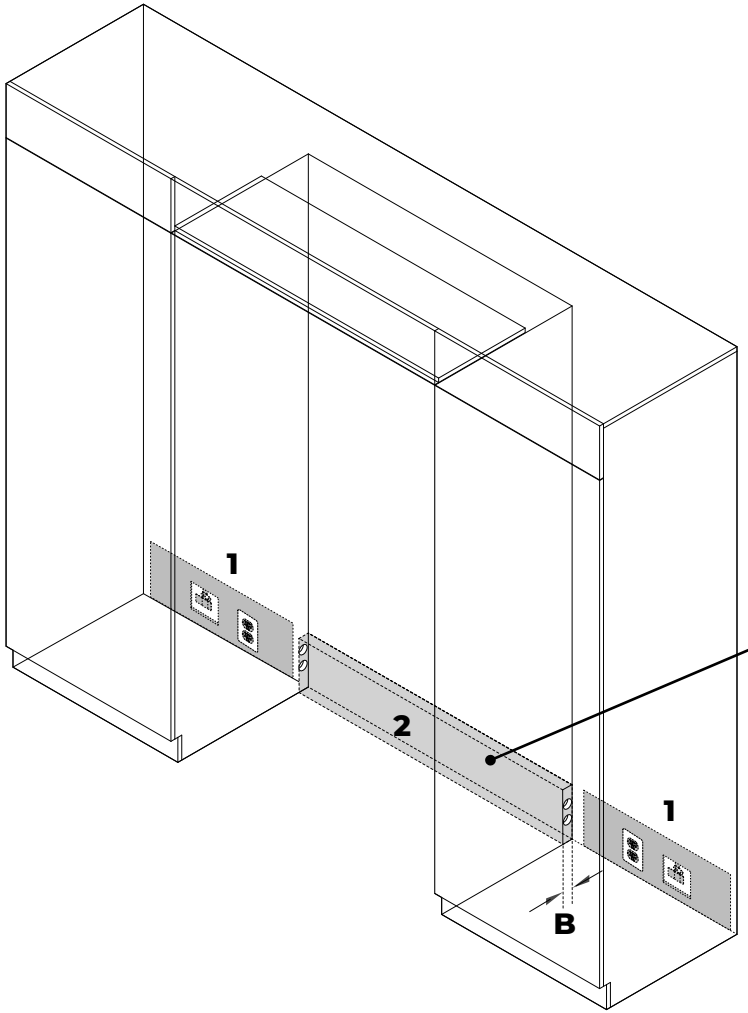

Cavity size shown for dual columns installation.

ELECTRICAL AND PLUMBING CONNECTIONS	
1	Recommended location for connections in adjacent area or unit
2	Alternative location for connections at rear of cavity

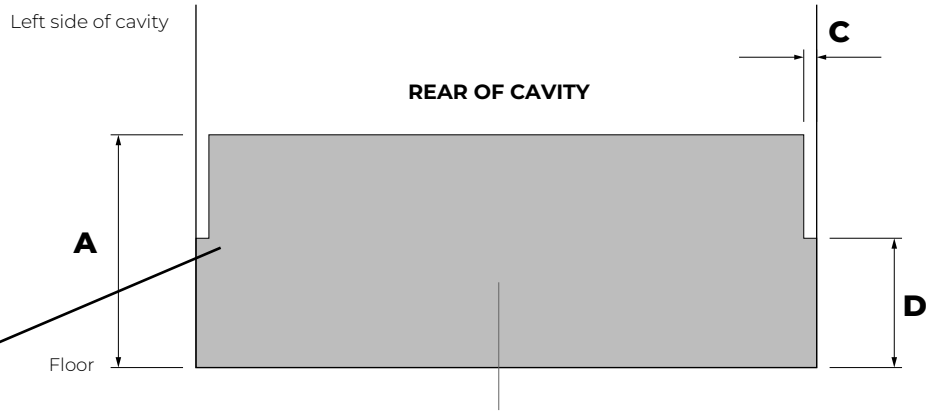

Electrical and water connections must be within this space if located behind the appliance and must not protrude from the back wall.

IMPORTANT!

- **Minimum overall depth of cavity should not be less than 650mm if power plug is located behind the appliance.**
- **If connections are located behind the appliance, ensure that you install an isolating switch to a location that is easily accessible for repair or disconnection.**

ELECTRICAL AND PLUMBING DIMENSIONS		mm
A	Overall height of supply area	229
B	Overall depth of supply area	25
C	Width of notch in supply area (both sides)	13
D	Height of sides of supply area (both sides)	127

Note: Dimensions are based on minimum depth of cavity.

!3 -A ELECTRICAL AND PLUMBING SPECIFICATIONS (FOR NZ & AU ONLY)

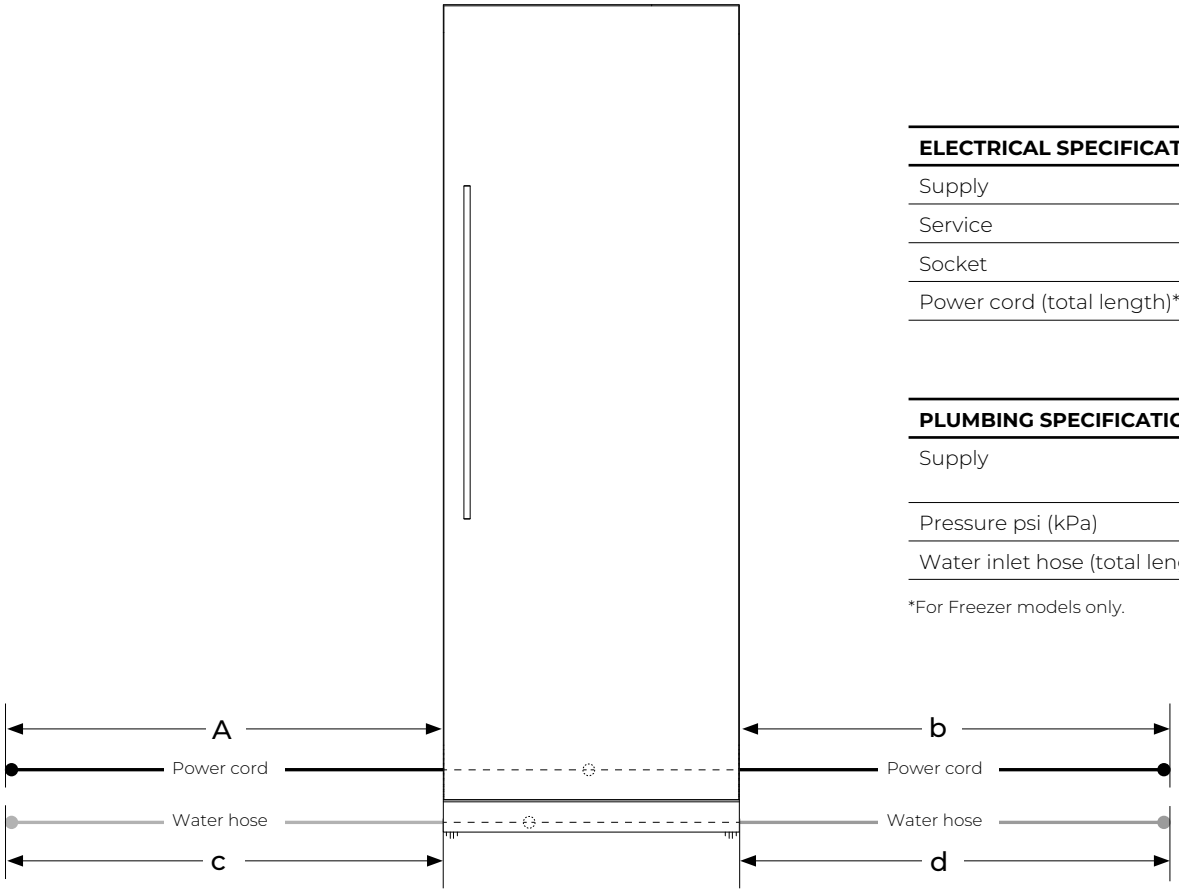

ELECTRICAL SPECIFICATIONS	FREEZER	REFRIGERATOR
Supply	230 VAC, 50 Hz	230 VAC, 50 Hz
Service	10 amp circuit	10 amp circuit
Socket	3-pin earthing-type	3-pin earthing-type
Power cord (total length)*	2000mm	2000mm

PLUMBING SPECIFICATIONS*	FREEZER	REFRIGERATOR
Supply	12.7mm (1/2") BSP Stainless steel braided hose with adaptor	NA
Pressure psi (kPa)	min 150psi (22) / max 827psi (120kPa) @ 68°F (20°C)	NA
Water inlet hose (total length)	3000mm	NA

*For Freezer models only.

	MAXIMUM DISTANCE OF POWER CORD AND WATER HOSE	RS46 mm	RS61 mm	RS76 mm
a	Power cord length from left side edge of appliance (excluding plug)	1385	1309	1233
b	Power cord length from right side edge of appliance (excluding plug)	1411	1335	1259
c	Water inlet hose length from left side edge of appliance	2271	2196	2120
d	Water inlet hose length from right side edge of appliance	1956	1878	1802

!3 -B ELECTRICAL AND PLUMBING SPECIFICATIONS (FOR GB & EU ONLY)

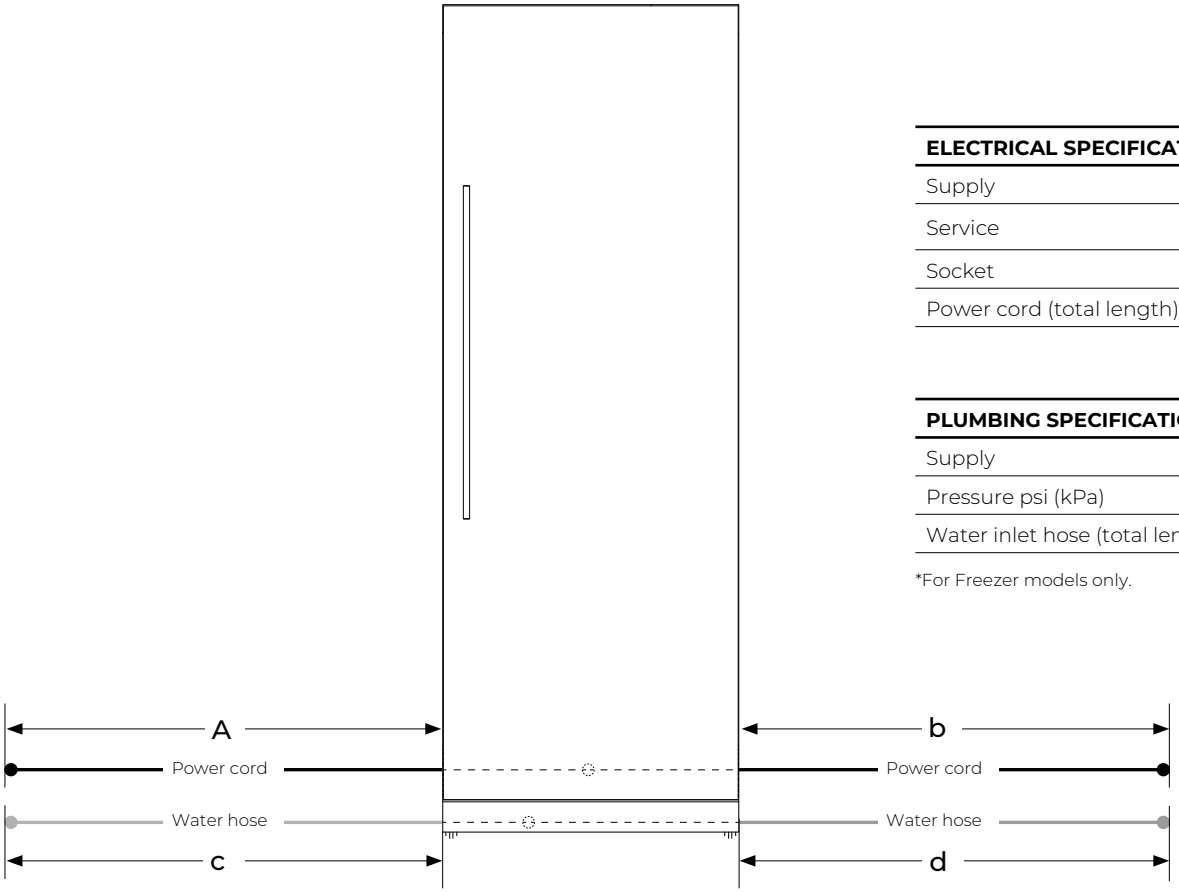

ELECTRICAL SPECIFICATIONS	FREEZER	REFRIGERATOR
Supply	230 VAC, 50 Hz	230 VAC, 50 Hz
Service	10 amp circuit	10 amp circuit
Socket	3-pin earthing-type	3-pin earthing-type
Power cord (total length)*	2000mm	2000mm

PLUMBING SPECIFICATIONS*	FREEZER	REFRIGERATOR
Supply	1/4" (6.4mm) plastic tubing	NA
Pressure psi (kPa)	min 150psi (22) / max 827psi (120kPa) @ 68°F (20°C)	NA
Water inlet hose (total length)	4000mm	NA

*For Freezer models only.

	MAXIMUM DISTANCE OF POWER CORD AND WATER HOSE	RS46 mm	RS61 mm	RS76 mm
a	Power cord length from left side edge of appliance (excluding plug)	1385	1309	1233
b	Power cord length from right side edge of appliance (excluding plug)	1411	1335	1259
c	Water inlet hose length from left side edge of appliance	3271	3196	3120
d	Water inlet hose length from right side edge of appliance	2956	2878	2802

IMPORTANT!

- **Ensure your appliance is not exposed to any heat generating appliance eg cooktop, oven or dishwasher.**
- **The appliance has front and rear rollers for moving the appliance forward and backward. Do not move the appliance sideways to avoid damaging the rollers or the floor covering/surface.**
- **The appliance must be installed by a qualified installer, or Fisher & Paykel trained and supported service technician to avoid faulty electrical connection and water leaks.**
- **All connections for water, electrical power and earthing must comply with local codes and ordinances and be made by licensed personnel when required.**
- **Avoid installation of the appliance/s under a ground fault circuit interrupter (GFCI).**
- **Ensure the appliance is installed properly. Improper installation that results in appliance failure is not covered under the appliance warranty.**

Check the installation location

Check the cabinetry

- Check the dimensions of the cabinetry: height (**A**), width (**B**), depth (**C**), floor level, finished alcove returns.
- Ensure that the ventilation openings in the cabinetry are clear of obstruction.

Check the power supply connection

- Ensure that there is a separate power socket for each appliance.
- Avoid sharing the power point with other appliances to prevent accidental switching off of the appliance.
- For power requirements, refer to the information on the serial plate.
- Ensure your appliance is properly grounded (earthed).
- Connect your appliance to an electrical supply with the fitted plug and lead.
- If power connection is located behind the appliance, we recommend to install an isolating switch to a location that is easily accessible to the user for repair or disconnection.
- Follow local codes and ordinances when installing the appliance.

Check the water supply connection (for Freezer models only)

- We recommend connecting the hose to exit at an angle if there is not enough clearance between the cabinet wall and back of appliance.
- Fisher & Paykel is not liable for damage (including water damage) caused by faulty installation or plumbing.

Check your appliance

- Ensure that your appliance is the correct model as per your order.
- Ensure that the packaging is not damaged upon delivery.
- Check that the components and install kits are complete.
- You have the option to change the door hinge side of your appliance from right hand hinge to left hand hinge or vice versa. A hinge change kit is required for this installation. Refer to ‘Optional — Changing over door hinges’ for more information.

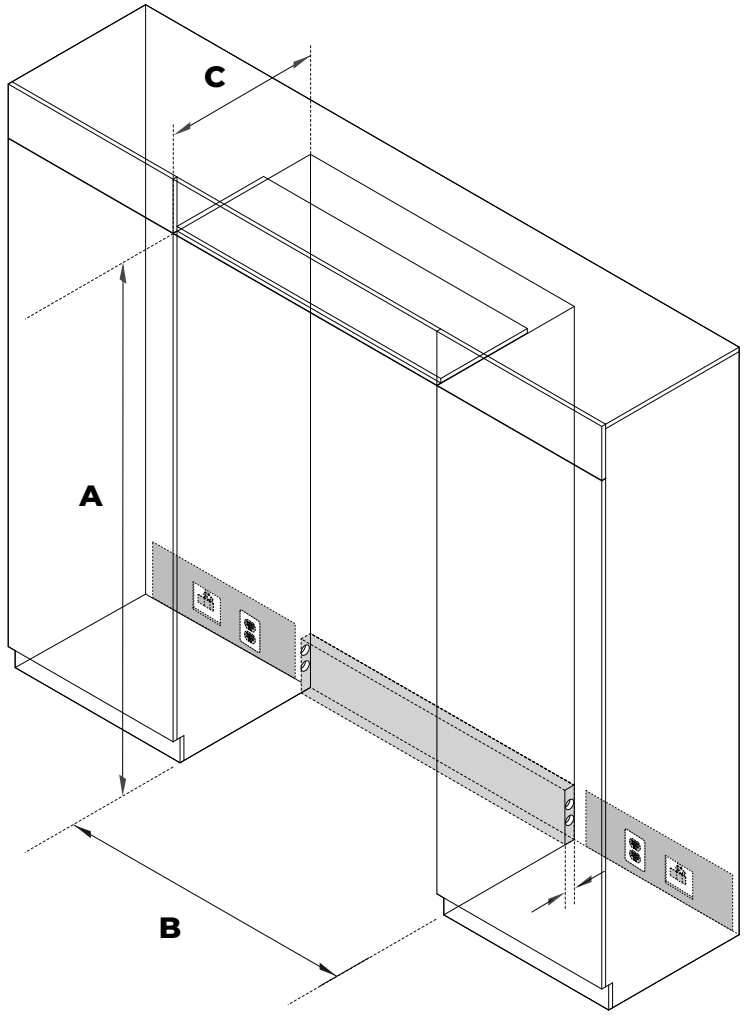

IMPORTANT!

- **Be careful when unpacking to prevent damage to the surface of your appliance.**
- **Ensure that the appliance is stable to prevent from tipping over when unpacking.**
- **Do not open the doors to prevent the appliance from tipping over.**
- **The appliance is heavy and requires a minimum of 2 persons to unpack and install.**
- **Ensure that the feet of the appliance are retracted.**
- **If the appliance is damaged, contact your Fisher & Paykel dealer.**
- **Take note of your model and registration numbers located at the lower right side of the appliance. You will need these to request for servicing or repair of your appliance.**

WARNING!

- **Follow these steps to avoid risks that can cause serious injury or death.**
- **Keep doors closed until the appliance has been moved to its installation location.**

Unpacking your appliance

1 Remove the top of the packaging carton. Cut along the cut lines and remove the carton and EPS (Expanded Polystyrene) foam.

2 Remove pre-packed install parts taped to the back panel of the appliance.

- Door panel side extrusion
- Side trim assembly
- Centre trim assembly
- Dual install joiner kit

Note: In some models, the install parts are packed in a box taped to back panel.

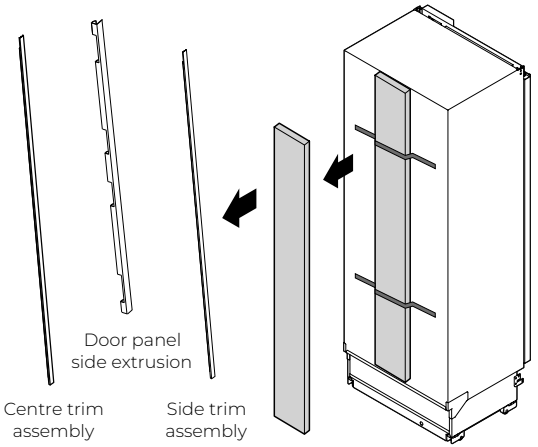

3 Remove/unscrew the pre-installed parts.

- Top trim
- Top door panel extrusion
- Toe kick mounting plate
- Top grille
- Bottom grille
- Air flow divider

Note: Set aside the screws to use later when reinstalling the removed parts.

Do not remove the central magnet housing (circled) from the top of the appliance.

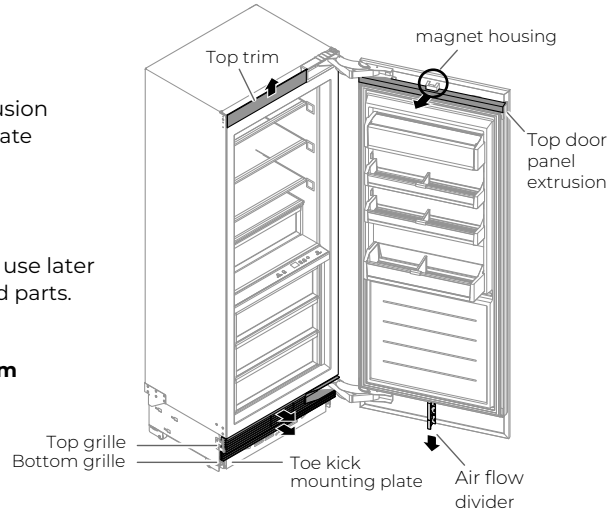

Moving your appliance

1 Remove the brackets from one side of the appliance. (Preferably, non-hinged side of the appliance.)

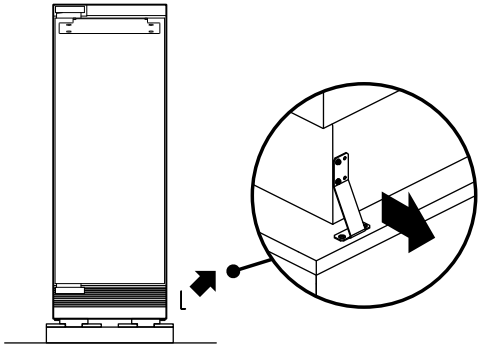

2 Tilt the appliance slightly to the opposite side.

3 Insert the hand truck under from the side of the appliance where the brackets were removed.

Do NOT insert the hand truck to the front or back of the appliance.

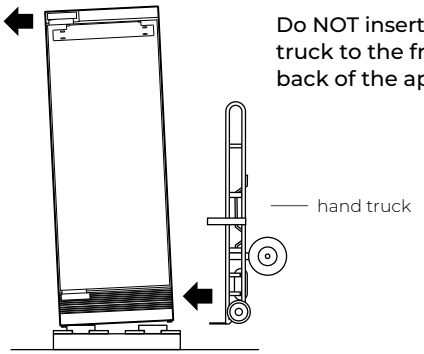

4 Restrain the appliance to the cart with straps.

5 Remove the brackets on the other side of the appliance.

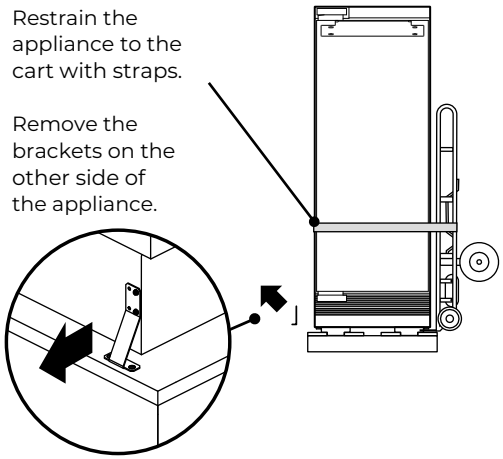

6 Tilt the appliance backward onto the cart.

7 Set aside the pallet and push the cart to the installation location.

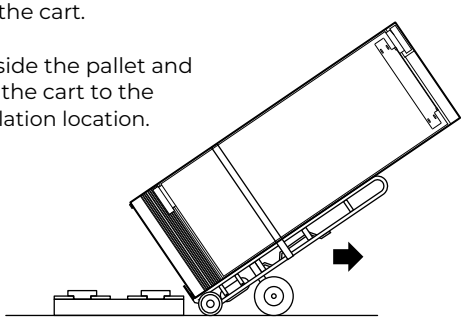

!5 CAVITY PREPARATION

Anti-tip bracket assembly kit



Anti-tip bracket
(1)



Masonry plug
(4)



#10x40 cross-head screw
(4)

Tools

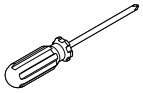

Cross-head screwdriver

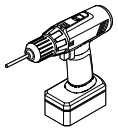

Powered driver



Pencil



Leveler



Safety glasses

IMPORTANT!

- **Ensure the door of the appliance is closed when rolling into the cabinetry.**
- **DO NOT attempt to open the door until the appliance is fully installed. The anti-tip bracket and fittings supplied must be fitted to the wall of the finished enclosure to withstand a 100kg load.**
- **Ensure that the anti-tip bracket is installed correctly to prevent the possibility of the appliance tipping forward when the door is open.**

WARNING!

Read the following reminders before fastening with masonry plugs and/or screws to avoid serious injury or possible death:

- **Ensure the screws avoid electrical, gas and water conduits.**
- **Ensure that the surface where the bracket is fastened can withstand a 100kg load.**
- **Ensure light-weight masonry material such as cinder block and new concrete (no curing time) are not used in installation.**
- **Do not use metallic materials that may corrode, stain and/or damage the enclosure.**

Attaching the anti-tip bracket

1 Project horizontally from the bottom end of the alcove return towards the back wall (**A**).
   – This will locate the contact surface between the bracket and the appliance.

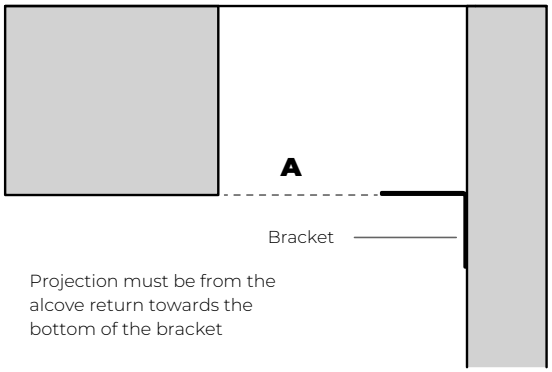

2 Mark the screw locations of the anti-tip bracket on the wall based on the most central wall stud (**B**).
   – If there are no wall studs, the bracket can be installed to solid brick walls with masonry plugs. (It is not recommended for use with perforated brick or hollow concrete bricks).

3 Drill screw holes to the marked locations.

4 For wooden/plaster board wall installation: Skip to step 5 .
For solid wall installation: Hammer 10x30mm masonry plugs (4x) into the wall until flush.

5 Fix the bracket to the wall with 10-12x35mm pan head screws (4x), and screw tightly (**C**).

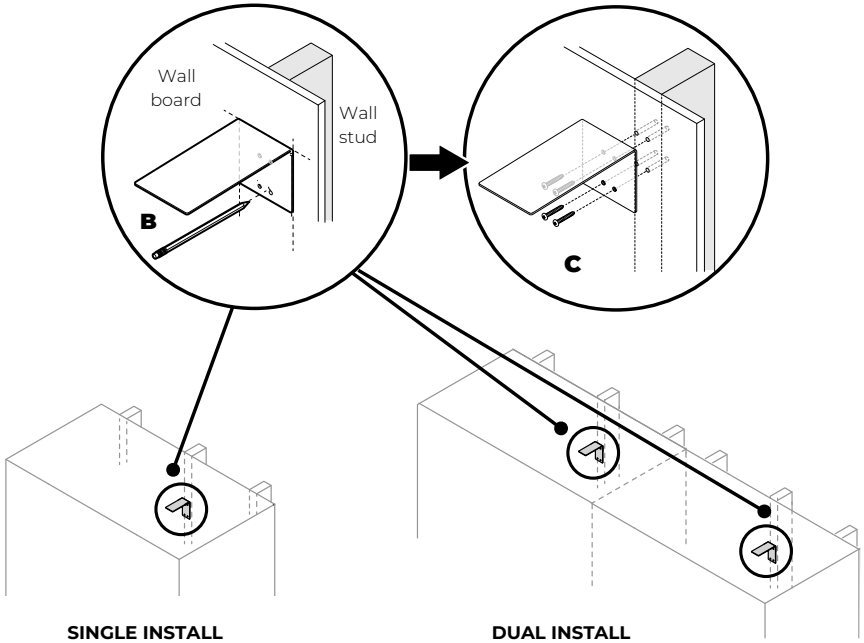

SINGLE INSTALL **DUAL INSTALL**

IMPORTANT!

Make sure the bracket overlaps the appliance by a minimum 180mm for a secure hold (E).

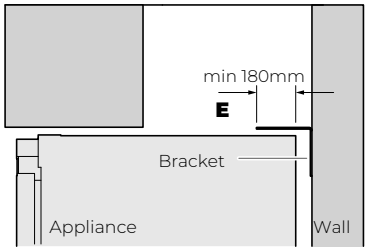

If the minimum 180mm overlap cannot be achieved, install a solid spacer to the wall stud behind the bracket (F).

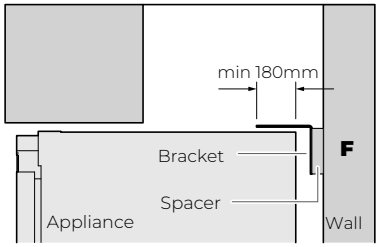

!6-A WATER AND POWER SUPPLY CONNECTION (FOR NZ & AU ONLY)

Water fittings kit
(Ice and Water models only)



Collet locking clip (1)

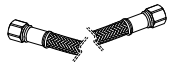

1/2 BSP Stainless steel braided hose with adaptor (1)

IMPORTANT!

- **Old water fittings (hose-sets) should not be reused.**
- **The appliance includes a stainless braided water line hose.**
- **The shut off valve should be accessible.**
- **Make sure each appliance is connected to a separate power socket.**

WARNING!

- **The water connection steps below are intended only for the professional installer.**
- **WARNING — connect to potable drinkable water supply only.**
- **DO NOT install on line pressure above 120psi (827kPa) or below 22psi (150kPa).**
- **DO NOT use on hot water supply (100°F [38°C max.]).**

Connecting to water supply (for Ice and Water models only)

1 Move the appliance in front of the cabinetry close enough that you can access behind for power and water connections.
2 Connect one end of the braided water hose to the water tap (**A**). Flush water through the hose prior to connection to the appliance to remove any debris in the hose.
3 Insert the adaptor end of the hose through a hole at the rear of the plinth (**B**).

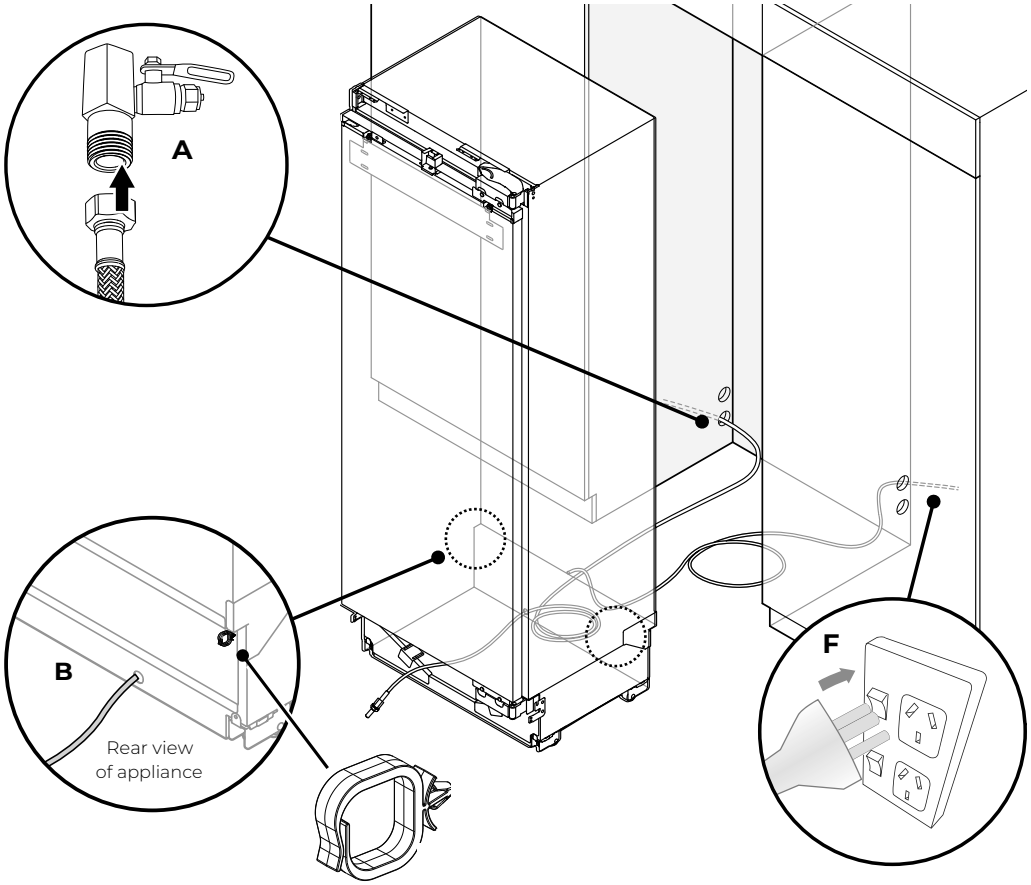

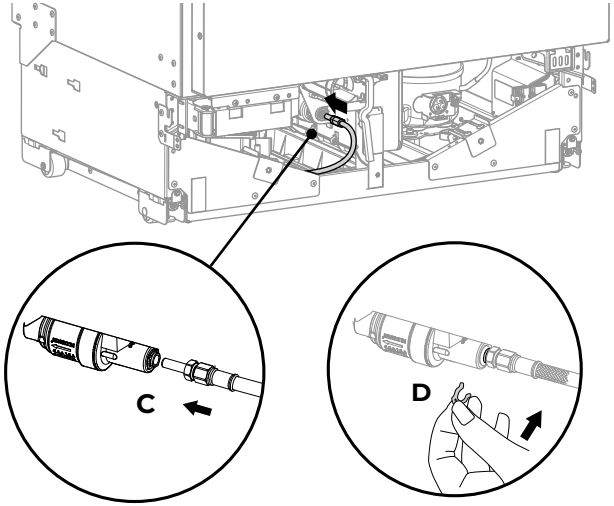

4 Pull the adaptor end of the braided hose all the way to the front of the appliance and insert the tube end of the adaptor fully into the PRV (**C**).
5 Secure the connection with a locking clip between the PRV and hose end of the adaptor (**D**).
6 Check the connection and open the water supply to test for leaks.

Note:
- The water supply connection is applicable for freezer models only.
- For dual installation, do the steps for both first and second appliances.

Connecting to power supply

7 At the back of your appliance, uncoil the power cord from the clips (**E**) and connect to the power supply (230 VAC, 50 Hz) (**F**).
- You will hear a chime sound when the appliance is powered on and automatically goes into 'Installer (standby) mode'.
- Refer to 'User guide' for more details on activating the appliance.

!6-B WATER AND POWER SUPPLY CONNECTION (FOR GB & EU ONLY)

Water fittings kit
(Ice and Water models only)



Collet locking clip
(1)



3/4" (19mm)
BSP water fitting
(1)



1/4" (6.4mm)
plastic tubing
(1)

IMPORTANT!

- **Old water fittings (hose-sets) should not be reused.**
- **The appliance includes a stainless braided water line hose.**
- **The shut off valve should be accessible.**
- **Make sure each appliance is connected to a separate power socket.**

WARNING!

- **The water connection steps below are intended only for the professional installer.**
- **WARNING — connect to potable drinkable water supply only.**
- **DO NOT install on line pressure above 120psi (827kPa) or below 22psi (150kPa).**
- **DO NOT use on hot water supply (100°F [38°C max.]).**

Connecting to water supply (for Ice and Water models only)

1 Move the appliance in front of the cabinetry close enough that you can access behind for power and water connections.
2 Attach the water fitting to one end of the plastic tube and connect it to a water tap (**A**). Flush water through the water tube prior to connection to the appliance to remove any debris in the hose.
3 Insert the other end of the tube through a hole at the rear of the plinth (**B**).

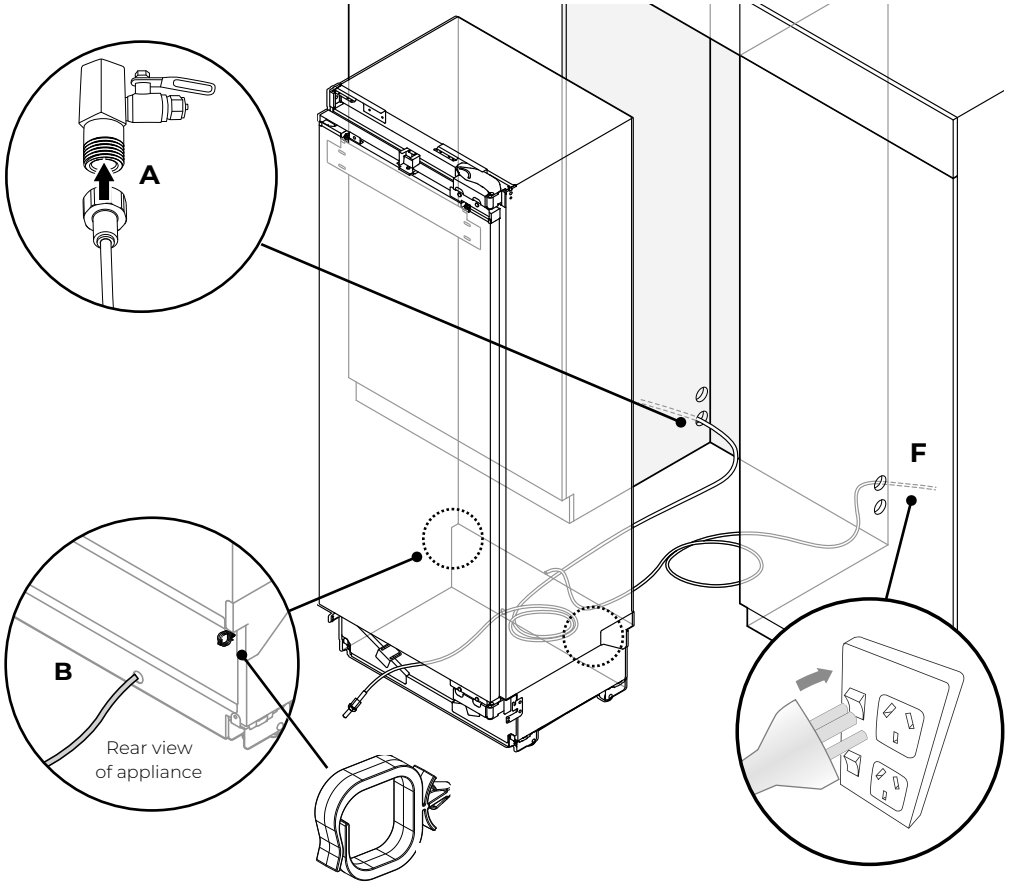

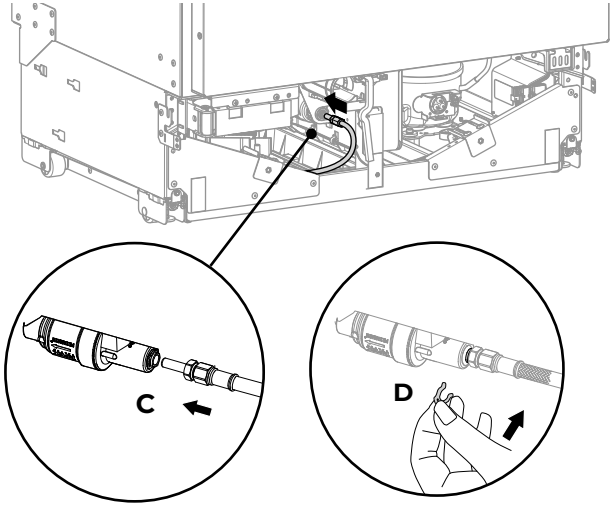

4 Pull the end of the plastic tube all the way to the front of the appliance and insert 16mm into the PRV (**C**).
5 Secure the connection with a locking clip between the PRV and hose end of the adaptor (**D**).
6 Check the connection and open the water supply to test for leaks.

Note:
- The water supply connection is applicable for freezer models only.
- For dual installation, do the steps for both first and second appliances.

Connecting to power supply

7 At the back of your appliance, uncoil the power cord from the clips (**E**) and connect to the power supply (230 VAC, 50 Hz) (**F**).
- You will hear a chime sound when the appliance is powered on and automatically goes into 'Installer (standby) mode'.
- Refer to 'User guide' for more details on activating the appliance.

Install fasteners kit

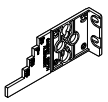

Cabinet depth alignment gauge (4)

Tools

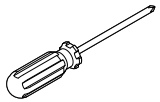

Cross-head screwdriver

Installing depth alignment gauges

Note: The alignment gauges are only temporary and removable after installation.

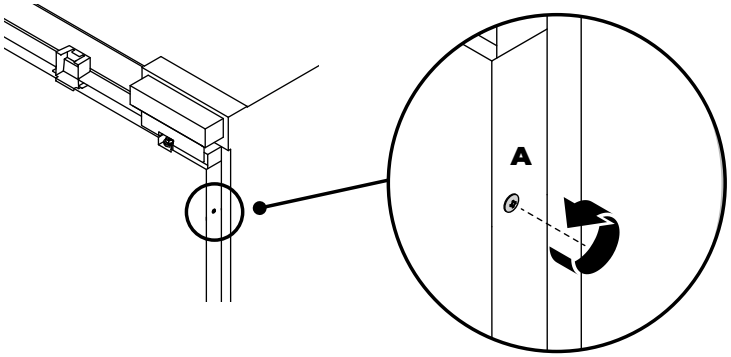

1 Loosen the screws at the right and left, top and bottom corners of the door (**A**).

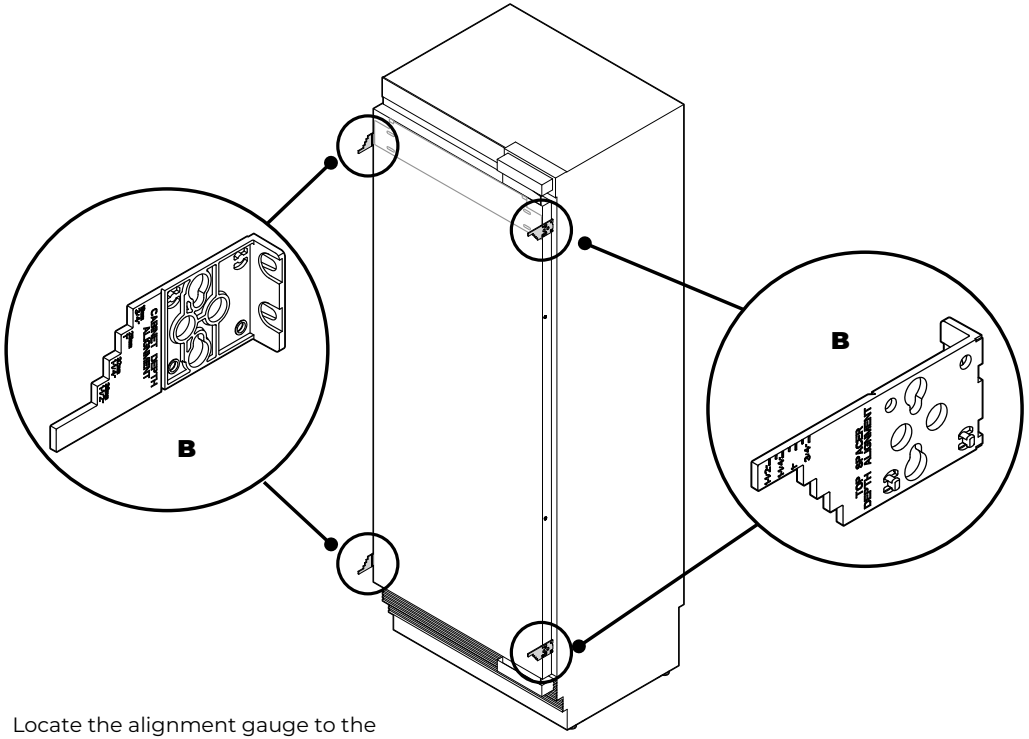

2 Locate the alignment gauge to the screws with the correct orientation (**B**).

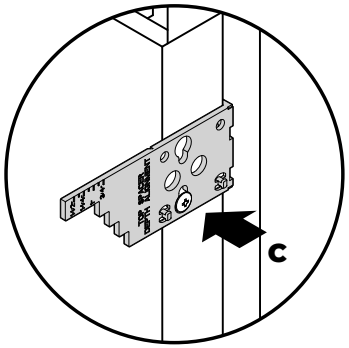

3 Attach the alignment gauges so that the screw head passes through the keyhole (**C**).

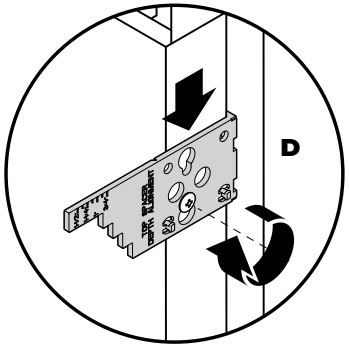

4 Lock the position of the alignment brackets in the keyhole, and tighten the screws just enough to firmly hold the gauges (**D**).

Install fasteners kit

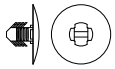

Barbed plug
(2)

Tools

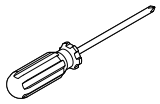

Cross-head screwdriver

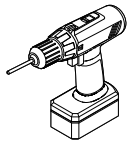

Powered driver (optional)

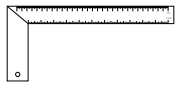

Ruler

IMPORTANT!

- **Ensure that the hose is not run over when moving the appliance/s to prevent damage and possible water leaks.**
- **Use low speed, low torque setting when using a powered driver.**
- **Ensure power cord is not damaged during installation.**

Positioning the appliance inside the cabinetry

1 Coil the water hose flat behind the appliance.

2 Before rolling the appliance into the cabinetry, insert a barbed plug into a large hole on each side of the appliance to protect the inside of the cabinetry from being damaged by screws on the sides of the appliance (**A**).

3 Roll the appliance slowly into the cabinetry. Ensure that the water hose is not run over to prevent damage that can cause a water leak.

4 Continue rolling the appliance into the cabinetry until the anti-tip bracket overlaps (min 180mm) the back top surface of the appliance. Refer to 'Cavity Preparation'.

5 Check the clearance between the floor and the feet. Ensure the rollers of the appliance can roll freely on the floor.

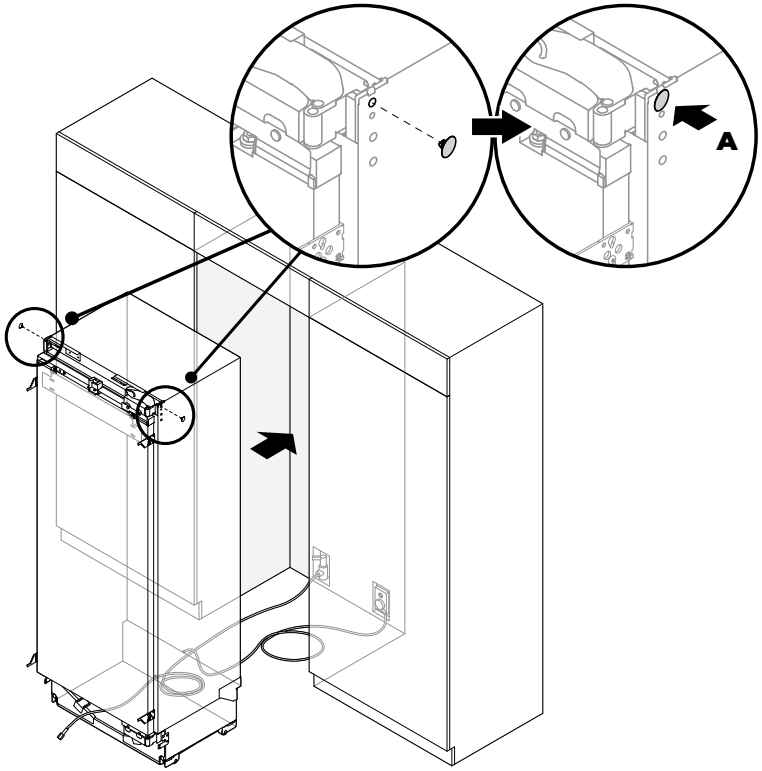

Aligning the appliance inside the cabinetry

6 Mark the step on each alignment gauge based on the thickness of the door panel to be installed to the door (**B**).

7 Align the marked steps of the gauges flush with the front surface of the cabinetry.

– Place a ruler on the steps of the alignment gauges to check if they are in line (**C**) relative to the thickness of the door panel.

8 Check if the gaps between appliance and cabinetry side walls are even on both sides.

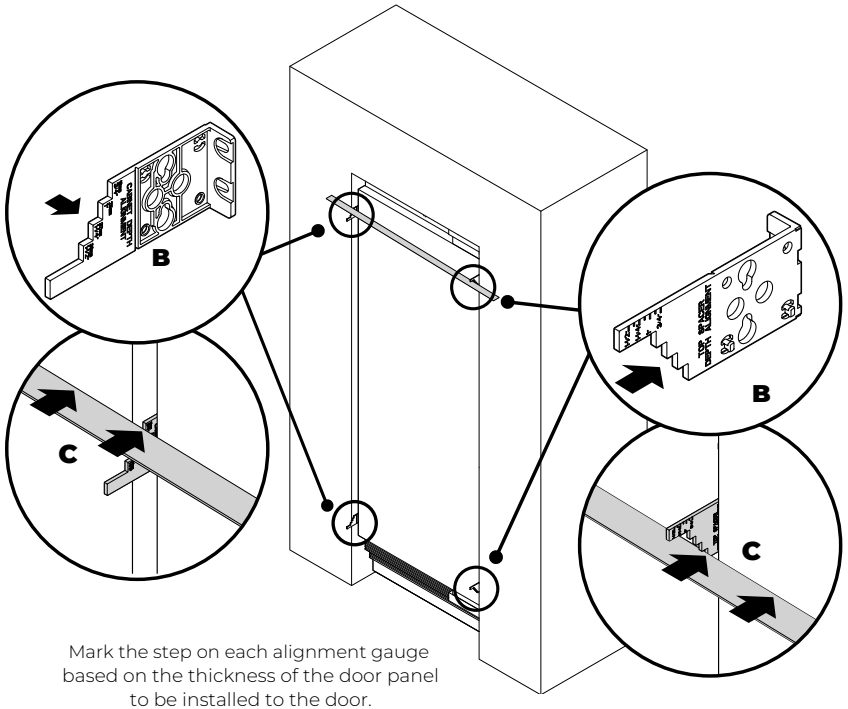

Mark the step on each alignment gauge based on the thickness of the door panel to be installed to the door.

Tools

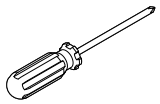

Cross-head screwdriver

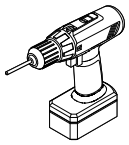

Powered driver (optional)

IMPORTANT!

- **Ensure the doors are in line with the cabinetry front and the appliance is centred.**
- **All four corners of the appliance must be supported firmly onto the floor to eliminate any movement. Installing the appliance on a soft, uneven, or not level floor may cause twisting and poor door sealing.**

Adjusting height of the appliance inside the cabinetry

1 Turn the front and rear adjustment screws using a cross-head screwdriver (or powered driver) to extend the feet until it engages the floor.
   - One turn of height adjusting nuts is equivalent to 0.5mm of height adjustment. Clockwise turn raises the height and counter-clockwise turn lowers height (**A**).
   - Align bottom gauge.
   - Adjust height.
   - Align top gauge.

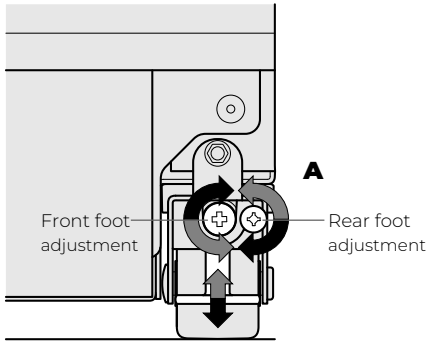

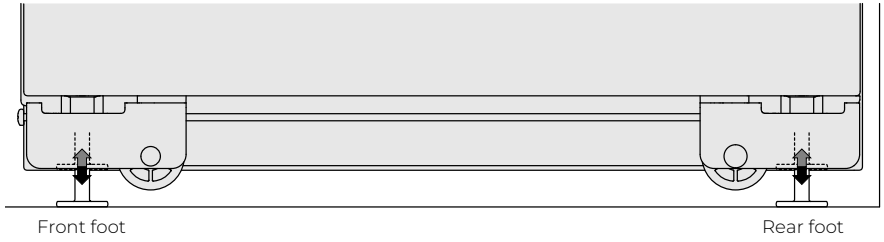

2 Continue turning the adjusting screws alternately between front and rear feet until you achieve the correct alignment.

3 Once you are satisfied with the alignment, raise the height of the appliance by alternately adjusting the front and rear feet until the top surface contacts the alcove ceiling.
   - Check the alignment gauges while adjusting the screws to make sure you maintain the alignment of the appliance.

4 Ensure all feet are positively engaged with the floor.

IMPORTANT!

- **Make sure to remove the depth alignment brackets before fixing the appliance inside the cabinetry.**
- **Open the appliance door to remove the alignment brackets from both sides of the appliance, and then re-tighten the screws.**

Fixing the appliance inside the cabinetry

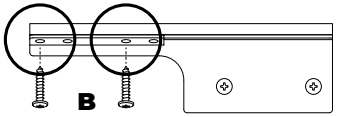

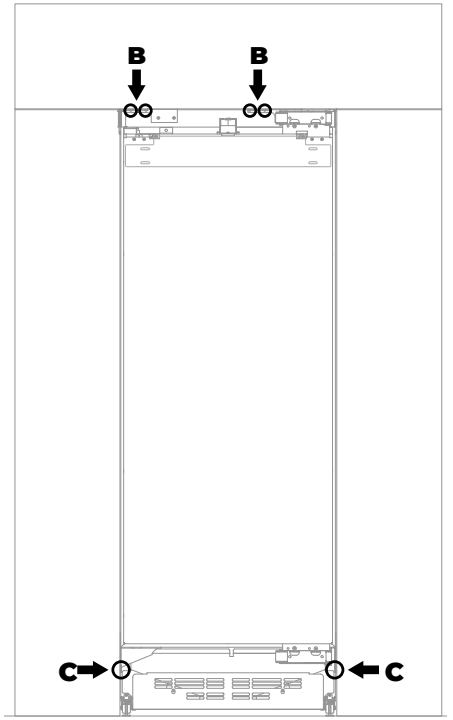

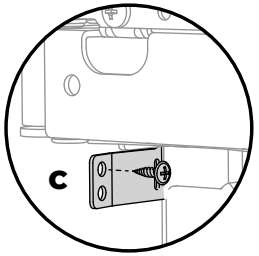

5 Fix each top bracket to the ceiling surface with two 8Gx16 countersunk screws (**B**).
   - 457mm column = 1 bracket
   - 610mm column = 2 brackets
   - 762mm column = 2 brackets

   Note: Make sure the appliance does not move as you open the door when you install the screws.

6 Fix the alcove side brackets (1x per each side) to the alcove side surface with 8Gx16 countersunk screws (**C**).

Install fasteners kit

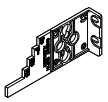

Cabinet depth alignment gauge (1)

Top joiner bracket kit

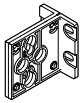

Central spacer (1)

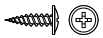

8Gx16 Mush washer screw (2)

Tools

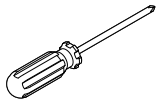

Cross-head screwdriver

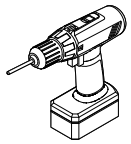

Powered driver (optional)

IMPORTANT!

- **Dual installation applies to two appliances to be installed side by side.**
- **A joiner kit is required and located in the Freezer model only.**
- **The joiner kit is also available for purchase through an authorised Fisher & Paykel dealer. Visit fisherpaykel.com for more information.**
- **Refer to 'Cavity dimensions' section for cabinetry overall width for dual install, and 'Dual installation option' for selecting applicable options.**
- **We recommend to place the appliance (Freezer) with water connection first into the cabinetry to allow you to check the connection before placing the second appliance.**
- **Follow the steps carefully for the correct installation of first and second appliances inside the cabinetry.**

Attaching the central spacer to cabinetry

Note: The spacer must be attached between the first and second appliances. The attachment location of the spacer to the alcove ceiling depends on the model of each appliance.

1 Measure from the alcove side towards the centre.

Note: The alcove width for each side depends on the size of the appliance to be installed. For example,

- left side alcove width (**A**) = 457mm model
- right side alcove width (**B**) = 762mm model

Refer to 'Cavity dimensions' section for dual install options.

2 Using one depth alignment gauge, mark the location and depth position of the central spacer on the alcove ceiling depending on the door panel thickness (**C**).

- Make sure to follow the marked depth of the alignment gauge relative to the door panel (**D**).

3 Fix the central spacer to the alcove ceiling with two 8Gx16 countersunk screws. Tighten the screws with a screwdriver or Powered driver) (**E**).

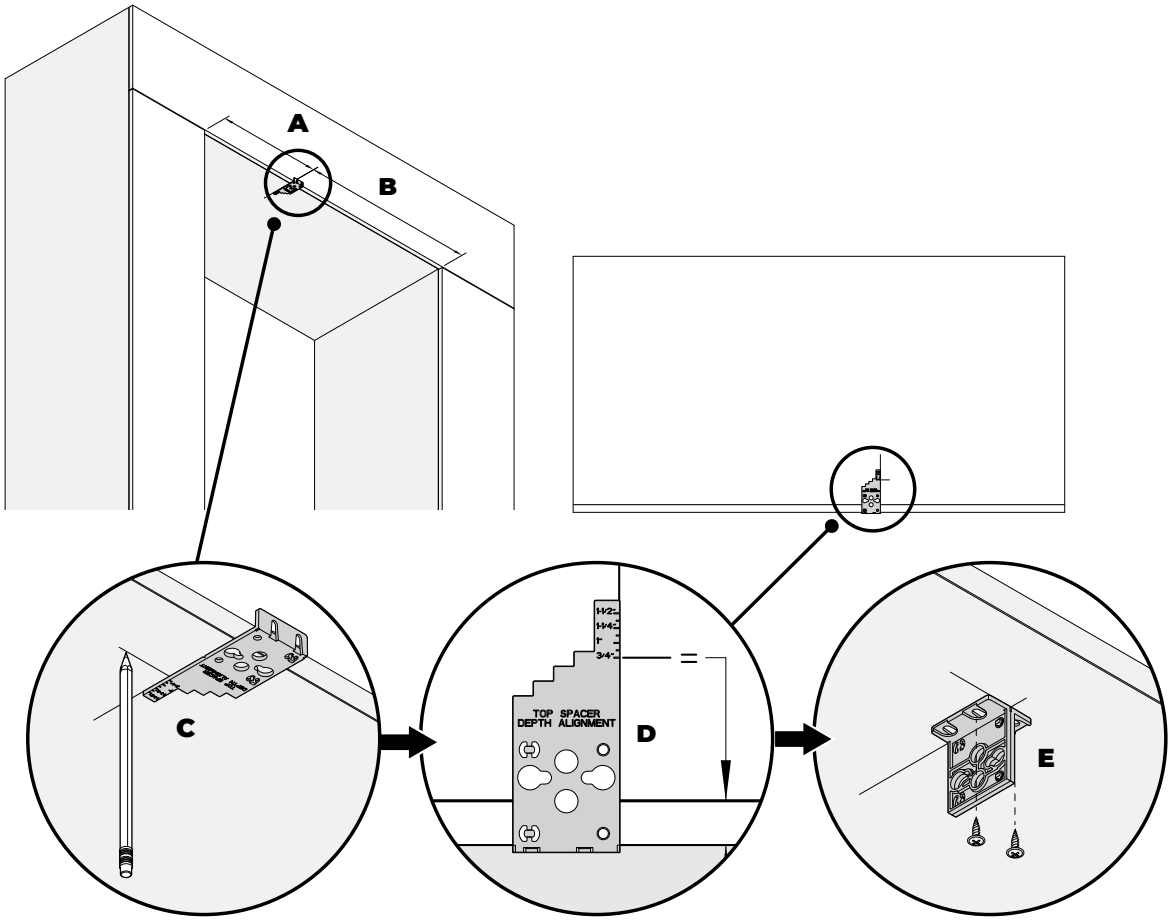

Install fasteners kit

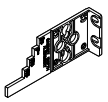

Cabinet depth alignment gauge (4)

Tools

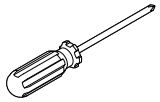

Cross-head screwdriver

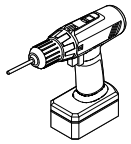

Powered driver (optional)

Installing depth alignment gauges

Note: The alignment gauges are only temporary and removable after installation.

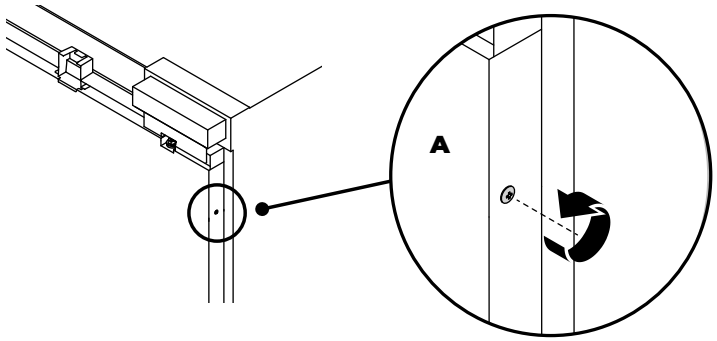

1 Loosen the screws at the right and left, top and bottom corners of the door (**A**).

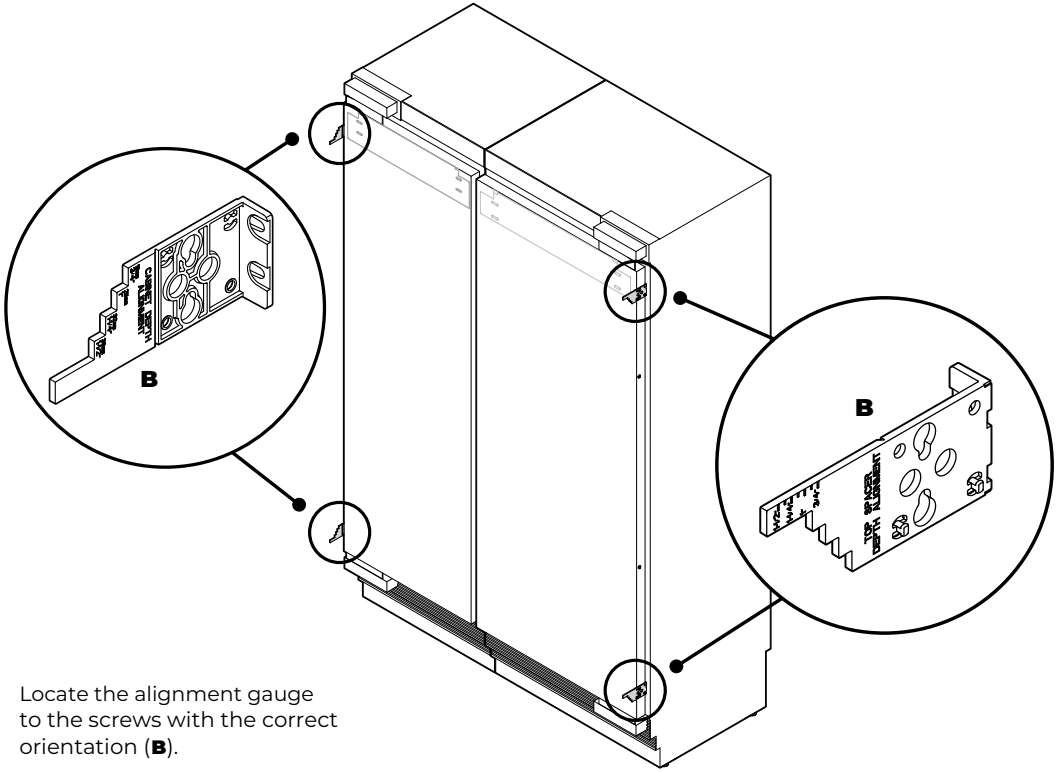

2 Locate the alignment gauge to the screws with the correct orientation (**B**).

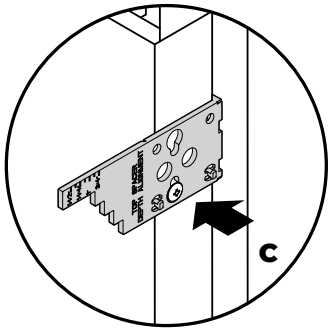

3 Attach the alignment gauges so that the screw head passes through the keyhole (**C**).

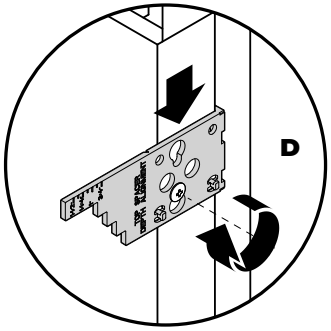

4 Lock the position of the alignment brackets in the keyhole, and tighten the screws just enough to firmly hold the gauges (**D**).

Install fasteners kit

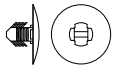

Barbed plug
(2)

Tools



Ruler

IMPORTANT!

- **Make sure that all feet engage the floor and evenly support the appliance.**
- **Tighten the adjustment screw with screwdriver (do not use powered driver).**

Positioning and aligning the first appliance inside the cabinetry

1 Coil the water hose flat behind the first appliance. (Refer to 'Connect to water and power supply').
2 Before rolling the first appliance, insert a barbed plug into a large hole on the cabinetry side of the appliance to protect the inside of the cabinetry from being damaged by screws on the side of the appliance (**A**).
3 Roll the first appliance (preferably, Freezer) inside the cabinetry (**B**).
   –- Ensure that the water hose is not run over to prevent damage and possible water leak.
4 Continue rolling the appliance into the cabinetry until the anti-tip bracket overlaps [minimum 180mm the back top surface of the appliance. (Refer to "Cavity Preparation').
5 Check the clearance between the floor and the feet. Ensure the rollers of the appliance can roll freely on the floor.

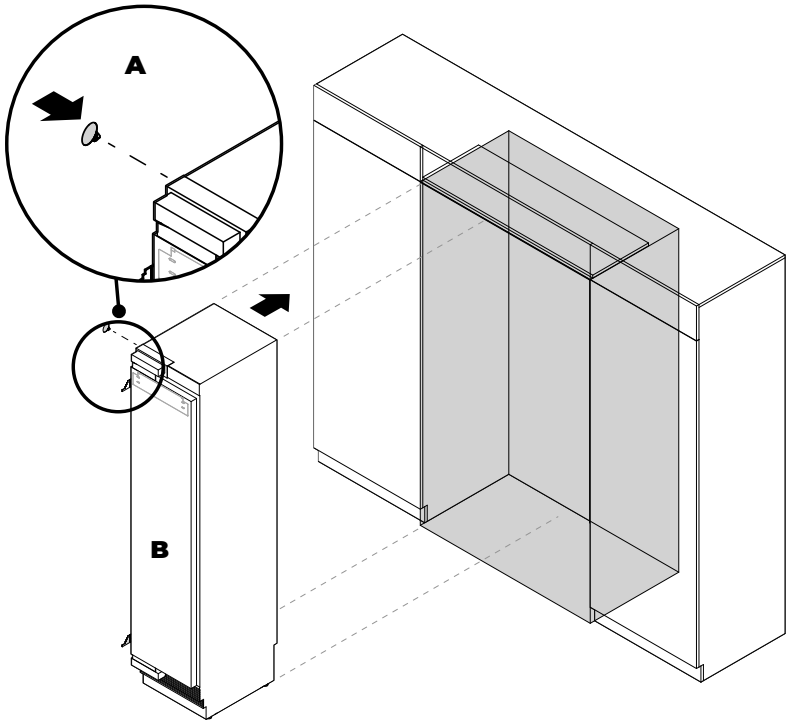

Note: The appliance can be rolled first into the left side or right side of the cabinetry depending on your preference.

6 Align the top cap of the first appliance flush with the front of the spacer (**C**).
7 Mark the step (**D**) of each alignment gauge based on the thickness of the door panel to be installed to the door.
8 Align the marked steps of the gauges flush with the front surface of the cabinetry.
   –- Place a ruler on the steps of the alignment gauges to check if they are in line (**E**) relative to the thickness of the door panel.
9 Check if the gaps between appliance and cabinetry side wall are even.

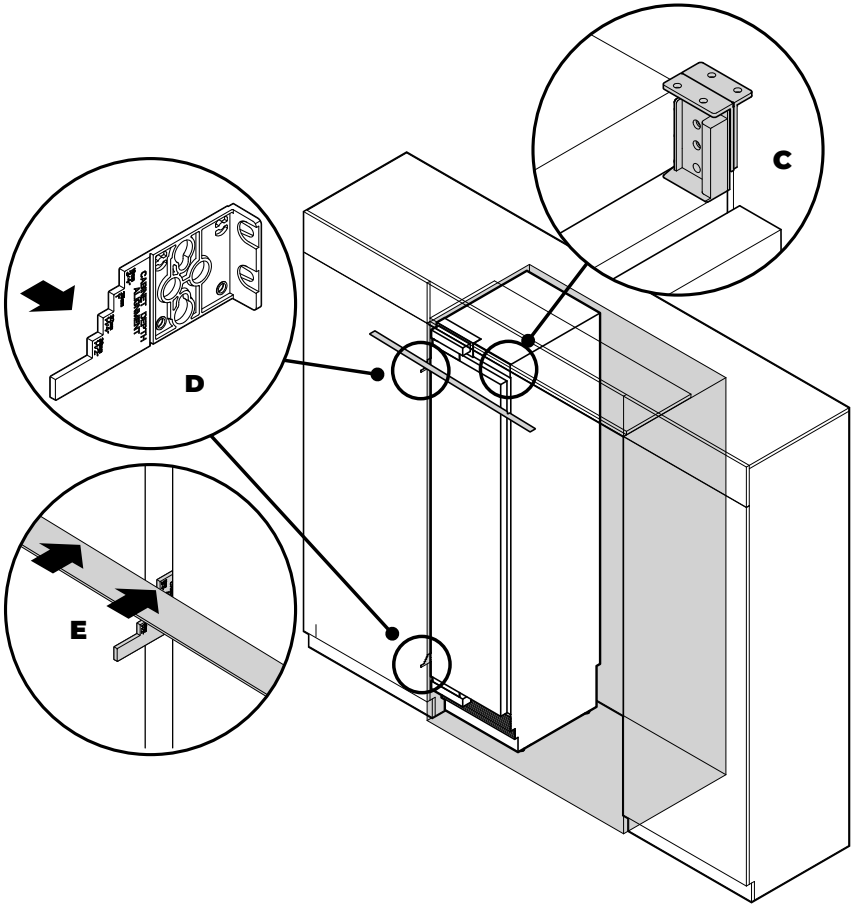

Install fasteners kit



8Gx16 Countersunk screw (5)

Tools

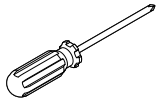

Cross-head screwdriver

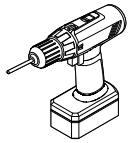

Powered driver (optional)

IMPORTANT!

- **Ensure the doors are in line with the cabinetry front and the appliance is centred.**
- **All four corners of the appliance must be supported firmly onto the floor to eliminate any movement.**
- **Installing the appliance on a soft, uneven, or not level floor may cause twisting and poor door sealing.**

Adjusting height of the appliance inside the cabinetry

1 Turn the front and rear adjustment screws using a cross-head screwdriver (or powered driver) to extend the feet until it engages the floor.
   – One turn of height adjusting nuts is equivalent to 0.5mm of height adjustment.
   Turn clockwise to raise the height and counter-clockwise to lower height (**A**).

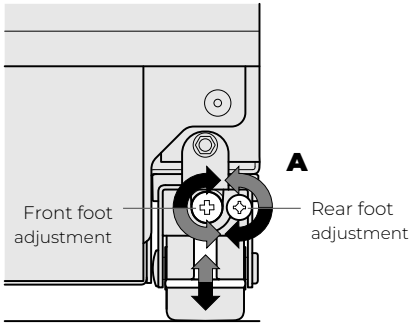

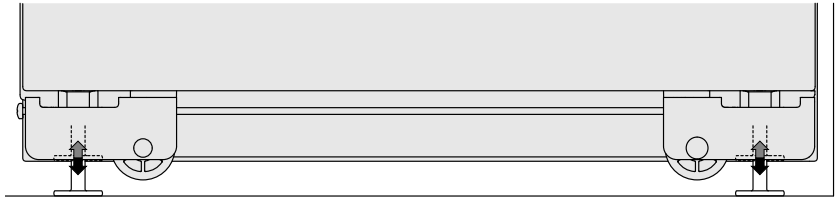

2 Continue turning the adjusting screws alternately between front and rear feet until you achieve the correct alignment.
3 Once you are satisfied with the alignment, raise the height of the appliance by alternately adjusting the front and rear feet until the top surface contacts the alcove ceiling.
   – Check the alignment gauges while adjusting the screws to make sure you maintain the alignment of the appliance.
4 Ensure all feet are positively engaged with the floor.

Fixing the first appliance inside the cabinetry

5 Fix each top bracket of first appliance to ceiling surface with two (2x) 8Gx16 countersunk screws (**B**).
   – 457mm column = 1 bracket
   – 610mm column = 2 brackets
   – 762mm column = 2 brackets
   Note: Ensure the appliance does not move as you open the door when you install the screws.
6 Fix the alcove side bracket to alcove side surface with one 8Gx16 countersunk screw (**C**).

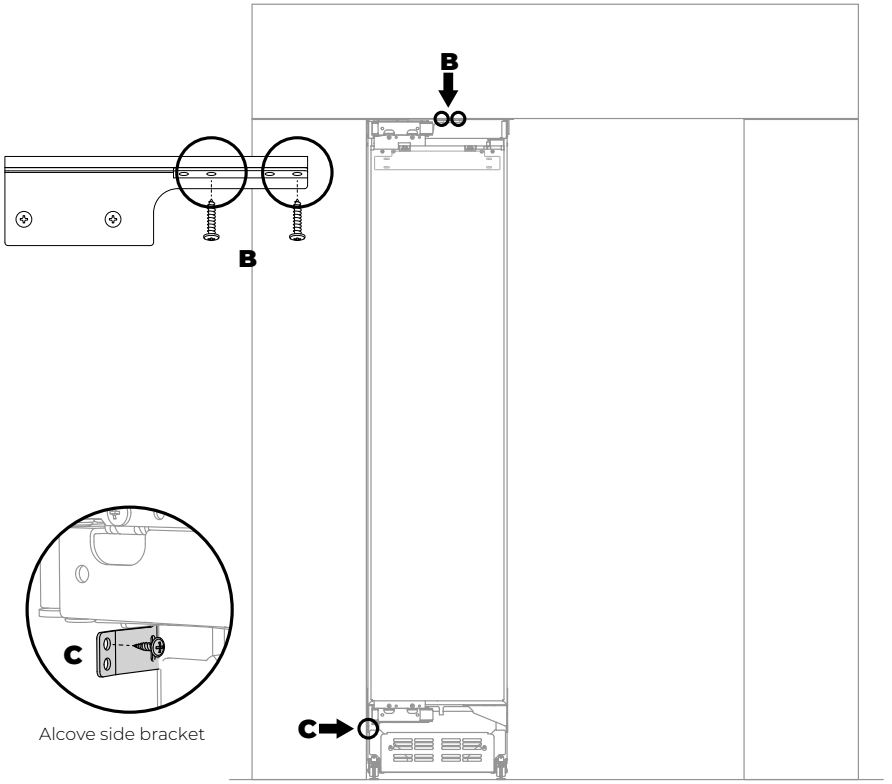

Alcove side bracket

Note: Image shows 457mm (first appliance) with 1 top bracket.

Install fasteners kit

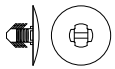

Barbed plug
(2)

Tools

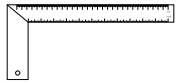

Ruler

Positioning and aligning the second appliance inside the cabinetry

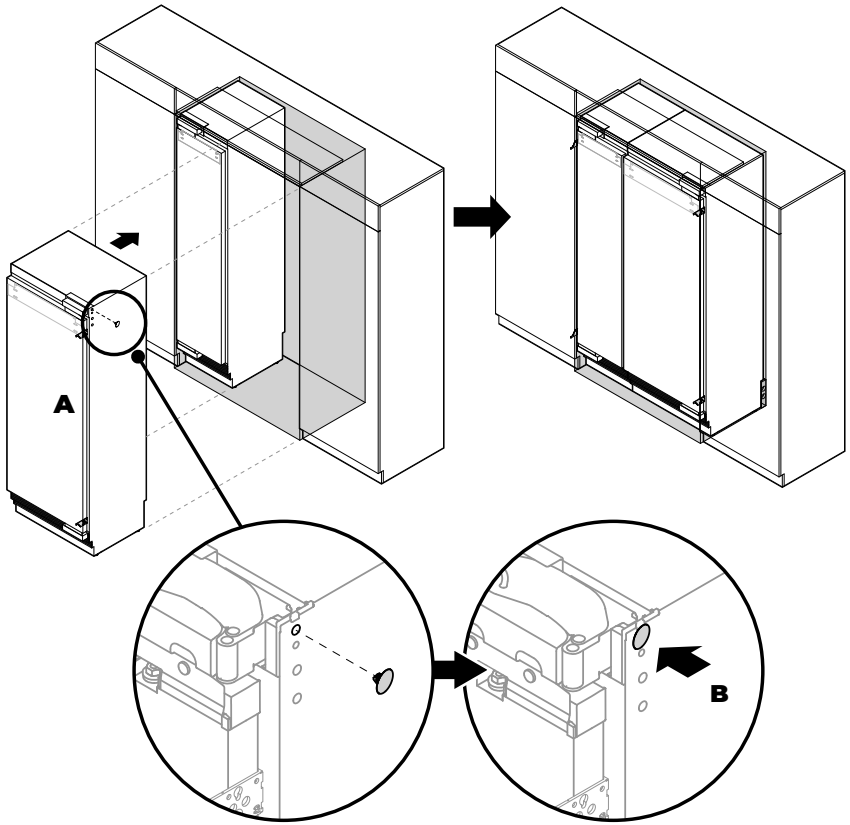

1 Before rolling the second appliance, insert a barbed plug into a large hole on the cabinetry side of the appliance to protect the inside of the cabinetry from being damaged by screws on the side of the appliance (**B**).

2 Roll the second appliance into the cabinetry side by side with the first appliance (**A**).

3 Continue rolling the appliance into the cabinetry until the anti-tip bracket overlaps (min 180mm) the back top surface of the appliance. Refer to 'Cavity Preparation'.

4 Check the clearance between the floor and the feet. Ensure the rollers of the appliance can roll freely on the floor.

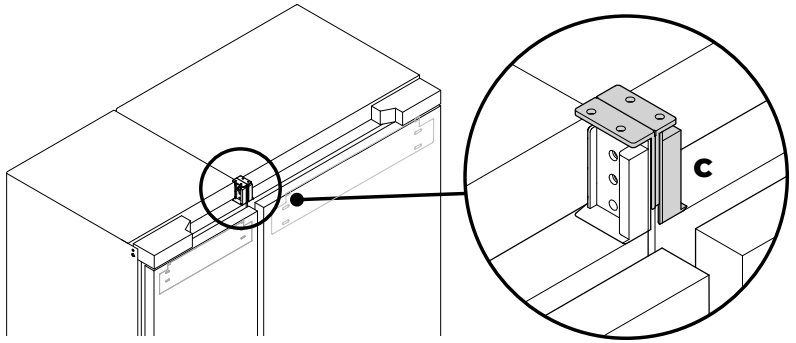

5 Align the top cap of the second appliance flush with the central spacer and top cap of first appliance (**C**).

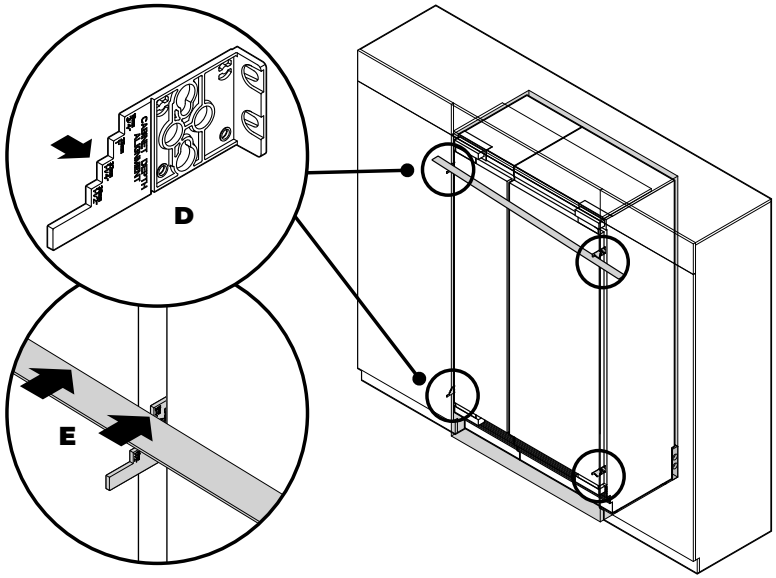

6 Mark the step (**D**) of each alignment gauge based on the thickness of the door panel to be installed to the door.

7 Align the marked steps of the gauges flush with the edges of the cabinetry side walls.

- Place a ruler on the steps of the alignment gauges to check if they are in line (**E**) relative to the thickness of the door panel.

8 Check if the gaps between appliance and cabinetry side wall are even.

Tools

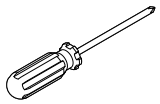

Cross-head screwdriver

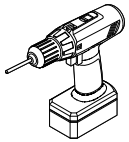

Powered driver (optional)

IMPORTANT!

- **Ensure the door is in line with the cabinetry front and the appliance is centred.**
- **All four corners of the appliance must be supported firmly onto the floor to eliminate any movement.**
- **Installing the appliance on a soft, uneven, or not level floor may cause twisting and poor door sealing.**

Adjusting height of the second appliance inside the cabinetry

1 Turn the front and rear adjustment screws using a cross-head screwdriver (or powered driver) to extend the feet until it engages the floor.
   – One turn of height adjusting nuts is equivalent to 0.5mm of height adjustment. Clockwise turn raises the height and counter-clockwise turn lowers height (**A**).

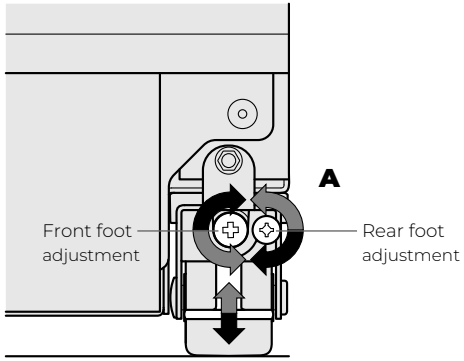

2 Continue turning the adjusting screws alternately between front and rear feet until you achieve the correct alignment of the second appliance with the first appliance.
3 Once you are satisfied with the alignment, raise the height of the appliance by alternately adjusting the front and rear feet until the top surface contacts the alcove ceiling.
   – Check the alignment gauges while adjusting the screws to make sure you maintain the alignment of both appliances.
4 Ensure all feet are positively engaged with the floor.

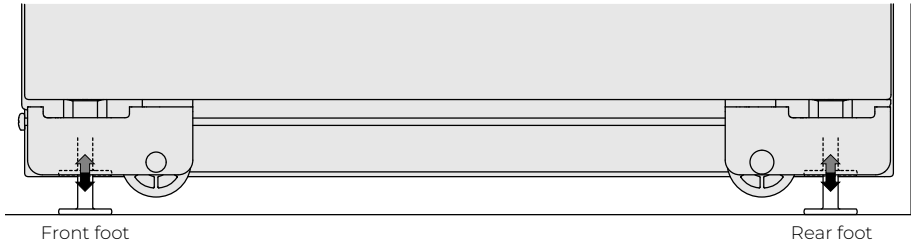

Dual install joiner kit

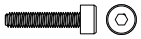

M5x20 Cap screw (1)



M5x16x1 Plain washer (1)



M6x16 Washer screw (1)



M6x12x3.2 Plastic washer (1)



M6 Hex nut (1)



8Gx16 Countersunk screw (5)

Tools



M4 Hex key

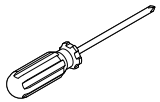

Cross-head screwdriver

Fixing the second appliance inside the cabinetry

1 Fix the top caps of first and second appliances to the central spacer with the top joiner fastener kit (**A**).
2 Fix the bottom joiner brackets of both appliances together with the bottom joiner kit (**B**).
   – Place the plastic washers between the bottom joiner brackets before fixing with the screw and nut. Tighten with M4 hex key.
3 Fix the top brackets (**C**) and bottom alcove side bracket (**D**) of the second appliance to the cabinetry with 8Gx16 countersunk screws.
4 Do final alignment check. Ensure the feet of both appliances are positively engaged with the floor.

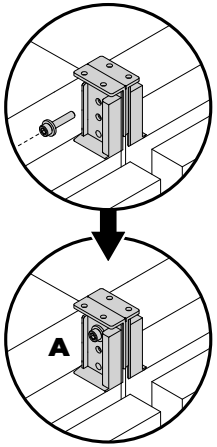

Top joiner brackets with central spacer

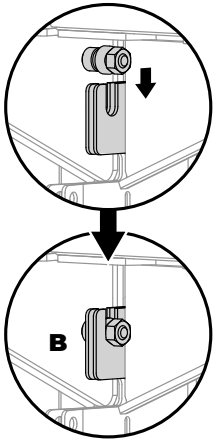

Bottom joiner brackets

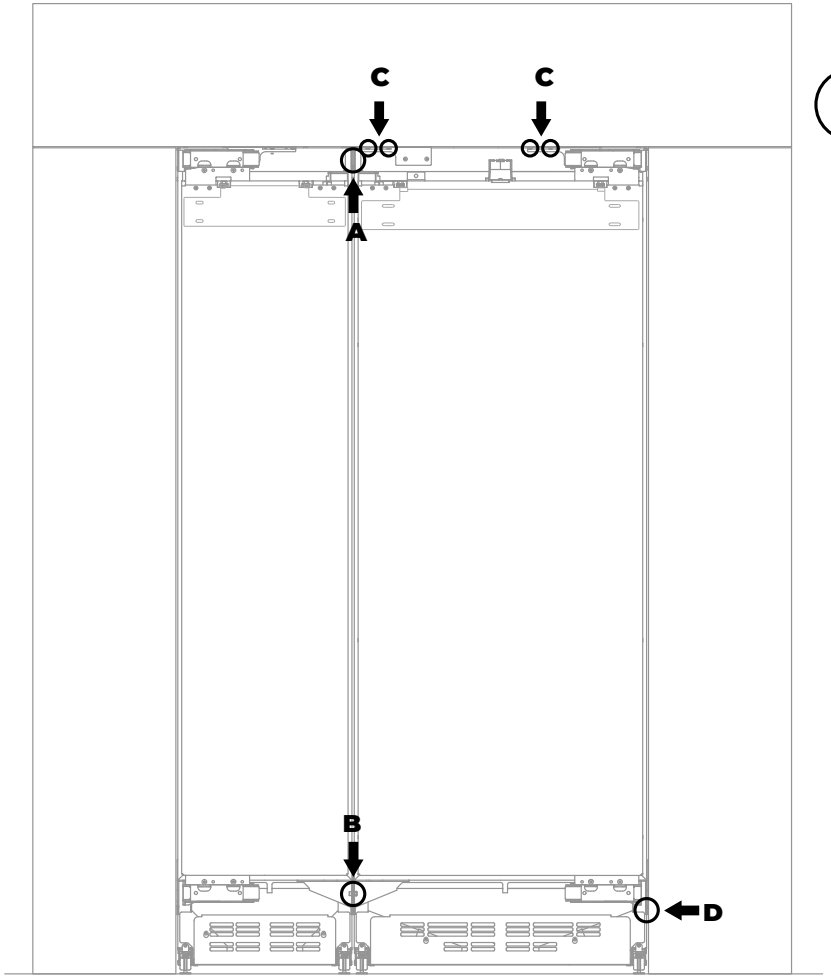

Note: Image shows 762mm (second appliance) with 2 top brackets.

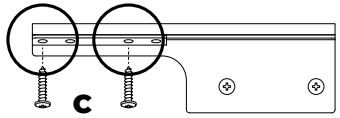

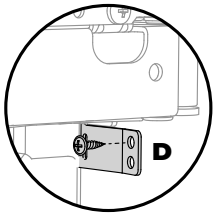

Alcove side bracket

!9 WATER FILTER INSTALLATION

Water filter install kit



Water filter
(1)

Tools



Filter cartridge tool
(1)

IMPORTANT!

- **The water filter head must be firmly pushed into the appliance and secured. incorrect installation can lead to water leaks.**

Install the water filter

1 Remove the water filter packaging.
2 Pull the filter tool gently to dislodge from the front of the appliance (**A**).
3 Insert the water filter all the way into the filter casing and press firmly until the filter head is pushed further inside the casing (**B**).
4 Using the filter tool, rotate the filter head 90° to lock in place (**C**).
5 Return the filter tool to its storage position (**D**).
6 Turn on the water supply to check for leaks.

Flushing the water filter

- Before turning on your automatic ice maker, the water filter must be flushed to remove any impurities or trapped air in the water tank and filter system.
- Refer to the user guide 'Operating steps— Automatic ice maker (freezer only)'.

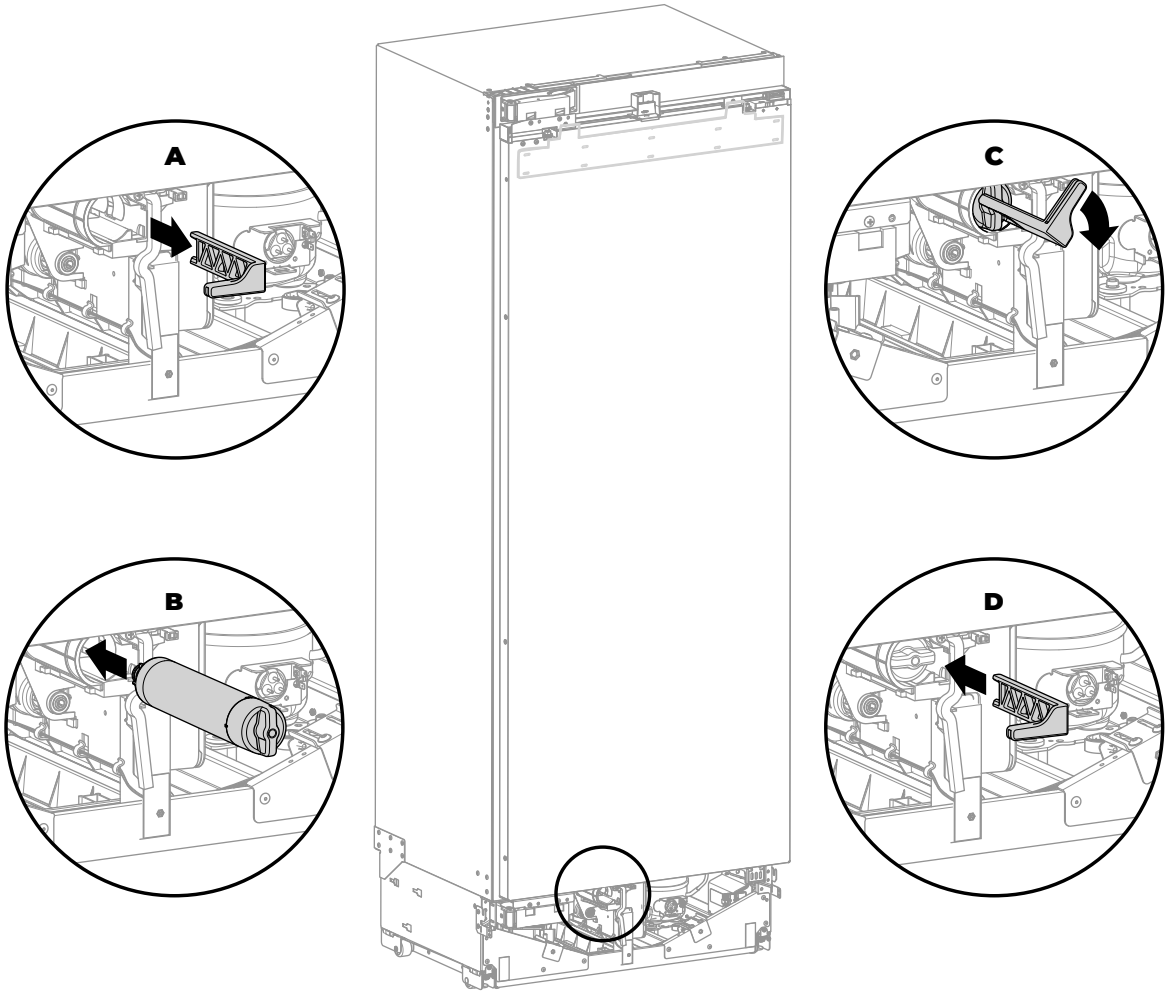

@0 DOOR PANEL INSTALLATION (STAINLESS STEEL)

Door handle kit



M5x25 Hex screw
(4x)

Door panel attachment kit



Side bracket
(6)



Bracket slider
(6)



Bracket spacer
(6)

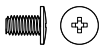

8Gx16 Mush washer screw
(30)

Tools

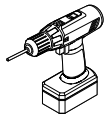

Powered driver
(with 2.5mm drill bit)



M4 hex key
(1)

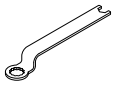

13mm spanner (1)

IMPORTANT!

- **Ensure to protect the finish of the Fisher & Paykel Stainless Steel door panels.**
- **Leave the protective film on the panels when hanging and remove the film only when the installation is complete.**

Remove hanging bracket

1 Remove the M8 washer and M8 nut from the M8 screws at the top the door (**A**) using the supplied hex key and spanner.

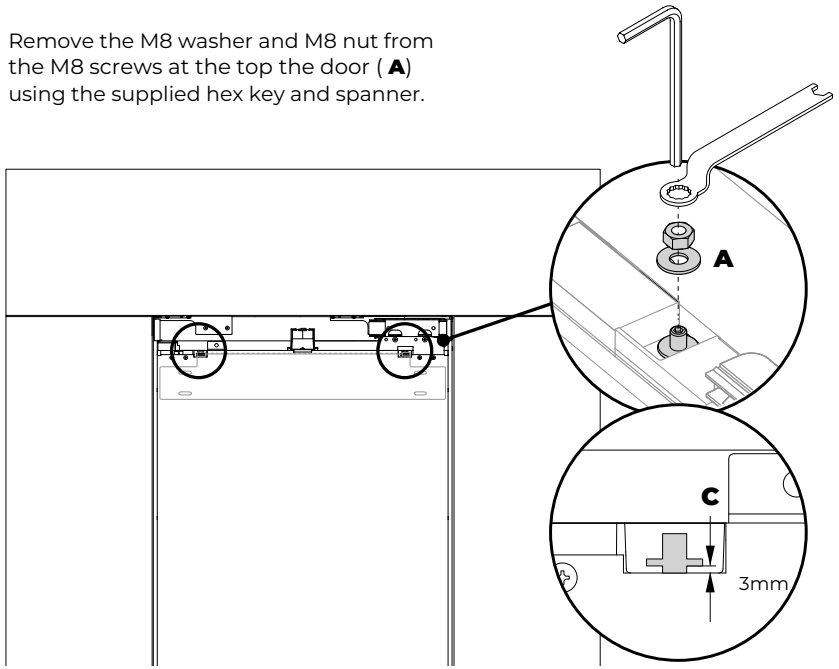

2 Remove the hanging bracket from the top of the door and set aside (**B**).

3 Unscrew the adjustment screws by 3mm to move close to the middle of adjustment range (**C**).

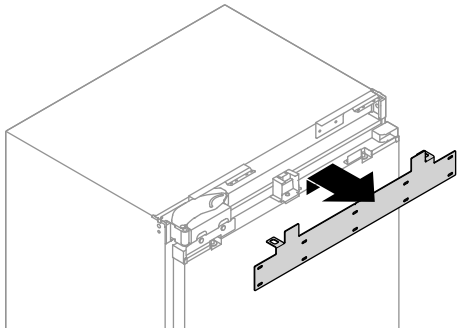

B

Attach the door handle

4 Remove the plastic plugs from handle holes (x4).

5 Align the handle to the holes and secure with M5x25 hex screws (**D**).

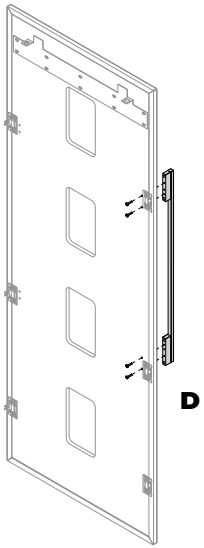

Attach the hanging and side brackets

6 Align the screw holes of the hanging bracket with the screw holes of the door panel, and fix with 8Gx16 mush washer screws (**E**).

- 6x screws for 457mm
- 10x screws for 610mm and 762mm

7 Align the side panel bracket assembly (bracket, slider and spacer) to the screw holes on the side of the door panel and fix with 8Gx16 mush washer screws (**F**).

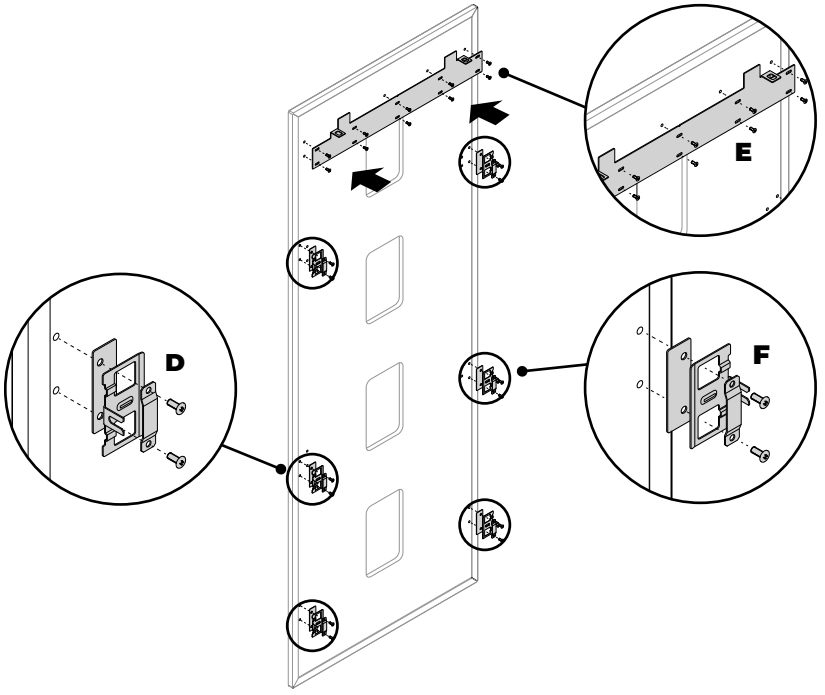

@0 DOOR PANEL INSTALLATION (STAINLESS STEEL)

Tools

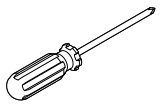

Cross-head screwdriver

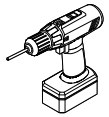

Powered driver
(with 2.5mm drill bit)



M4 hex key
(1)

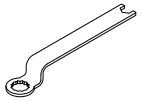

13mm spanner
(1)

Hang the door panel

1 Remove the gauges and retighten the screws. Open the door and loosen the screws at both sides of the door (do not remove) (**A**).
2 Hang the door panel with a small angle to the door by locating the holes of the top bracket to the M8 studs (**B**), and rotate the door panel down so that the side attachment brackets slide onto the side screws of the door. (**C**)
3 Screw the M8 washer and nut to the stud (**D**), and re-tighten the side screws (**A**) to fix the door panel (do not fully tighten). This will allow opening the door without affecting adjustment of the door panel.

Note:
We recommended to load the shelves in the appliance door with weights to ensure an accurate door panel gap width.

Weight recommendations:
- 457mm appliance: 10kg
- 610mm appliance: 15kg
- 762mm appliance: 20kg

Adjust the door panel

Note: Check the gaps between door panel/cabinetry using the gauge (3mm). All door panels have full axis adjustment to ensure they are flush with adjacent walls.

1 To adjust the height of the door panel relative to the door, use M4 hex key to turn the top M8 screw (**E**) clockwise to lower or counter-clockwise to raise the door panel until the gap with the cabinetry above is 3mm.
2 To adjust the depth of the door panel, loosen the side screws (**F**) from each side and slide the panel forward/ backward. Re-tighten once satisfied.
3 To adjust the door panels further, remove the door panels then loosen the fixing screws for the hanging bracket and move the bracket sideways to suit. (**G**)
4 Once satisfied with the door panel position, fully tighten M8 washer and nut to the stud using the supplied hex key and spanner (**E**).

Fix the locking brackets

1 Loosen the screw at the bottom of the door, and slide the locking bracket out until it touches the panel (**H**).
2 Fix the locking bracket to the door panel with 8Gx16 countersunk screw (**I**).
3 Re-tighten the screw at the bottom of door (**J**).

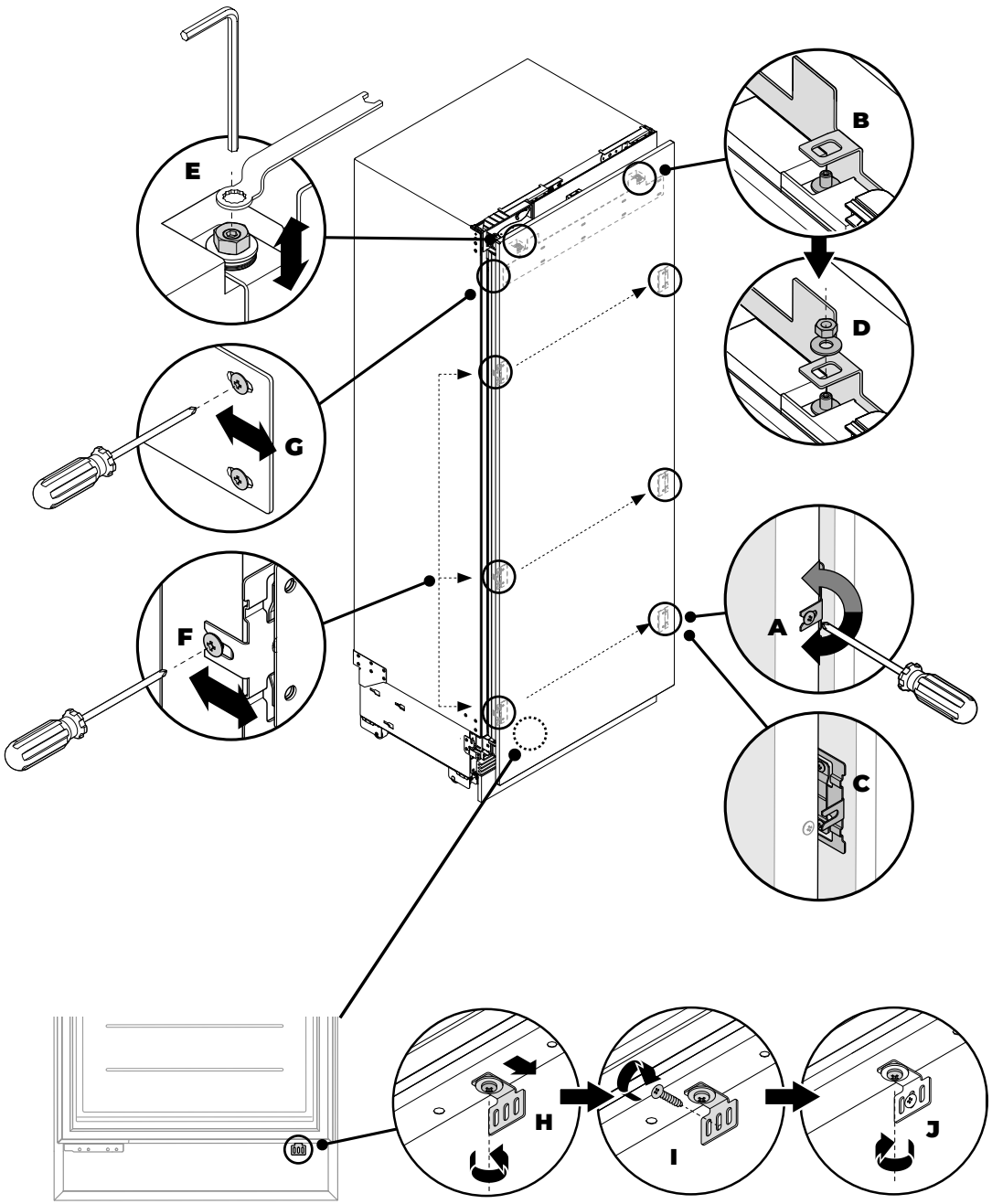

@1 DOOR PANEL INSTALLATION (CUSTOM)

Door handle kit



M5x25 Hex screw
(4x)

Door panel attachment kit



Side bracket
(6)

Bracket slider
(6)



Bracket spacer
(6)

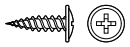

M5x12 Cross-head screw
(30)

Tools



Powered driver
(with 2.5mm drill bit)



M4 hex key
(1)

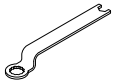

13mm spanner (1)

IMPORTANT!

- **Ensure the screw pilot holes do not penetrate the full depth of the panel.**
- **Do not place the handle holes in marked areas to avoid clashing with panel attachment brackets.**
- **Minimum panel thickness where screw hole is drilled must be 16mm.**

Remove hanging bracket

1 Remove the M8 washer and M8 nut from the M8 screws at the top the door (**A**) using the supplied hex key and spanner.

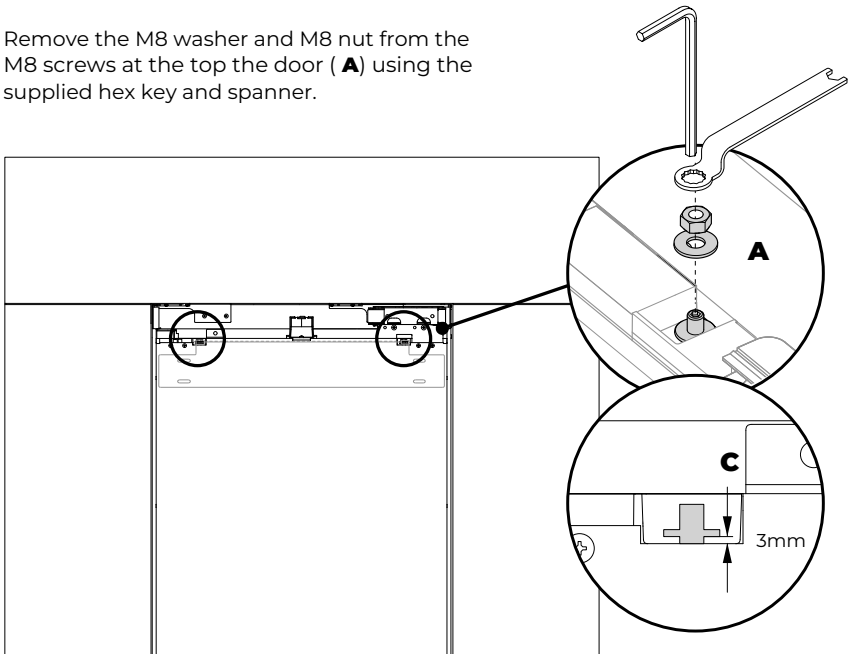

2 Remove the M8 washer and M8 nut from the M8 screws at the top the door (**B**).

3 Unscrew the adjustment screws by 3mm to move close to the middle of adjustment range (**C**).

4 Mark the location of the screw holes and drill pilot holes to the marked location.
Refer to the custom panel template in the 'Custom door panel dimensions' section **.**

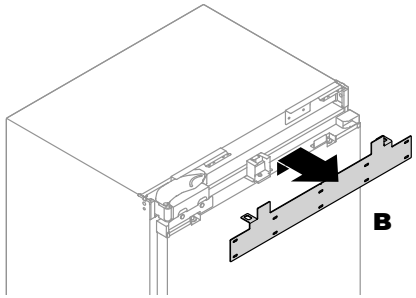

Attach the door handle

5 Fix the handle with M5x25 hex screws from the inner edge of the panel (**D**). Refer to 'Custom door panel dimensions' section to ensure door handle does not interfere with side attachment brackets.

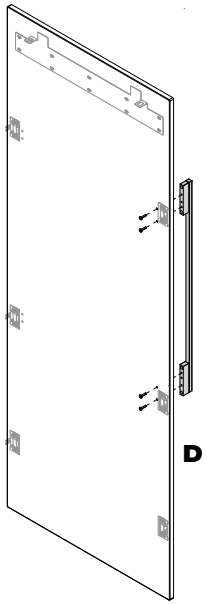

Attach the hanging and side brackets

6 Mark the centreline from the top of the Custom panel and align with the 'V' notch in the bracket (**E**).

7 Align the screw holes of the bracket with the screw holes of the door panel and fix the hanging bracket to the door panel with M5x12 Cross-head screws (**F**).
   - 6 screws for 457mm
   - 10 screws for 610mm and 762mm

8 Align the side panel bracket assembly (bracket, slider and spacer) to the screw holes on the side of the door panel and fix with 8Gx16 mush washer screws (**G**).

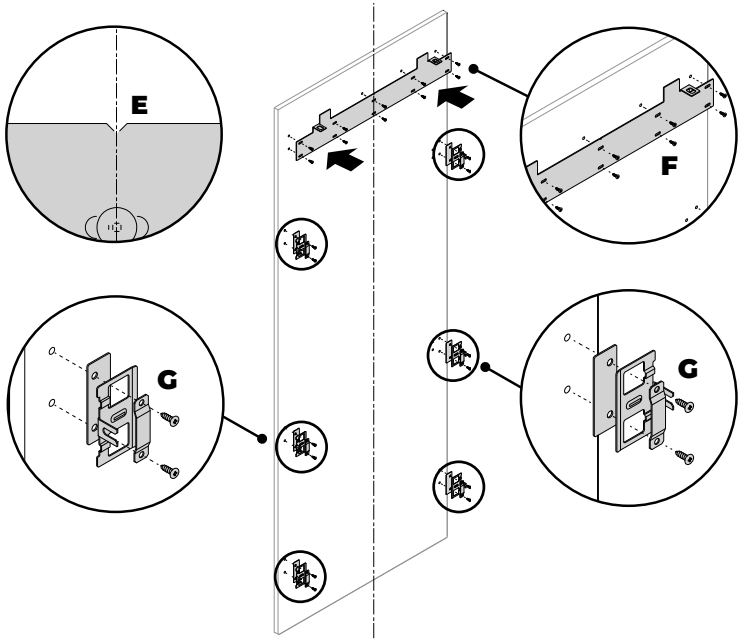

@1 DOOR PANEL INSTALLATION (CUSTOM)

Tools

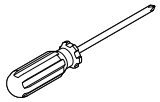

Cross-head screwdriver



Powered driver/drill
(with 2.5mm bit)

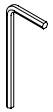

M4 Hex key
(1)

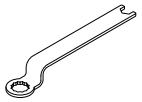

13mm spanner
(1)

IMPORTANT!

- **If using Custom door panels, ensure they are prepared as per 'Custom door panel dimensions' section.**

Hang the door panel

1 Remove the gauges and retighten the screws. Open the door and loosen the screws at both sides of the door (do not remove) (**A**).
2 Hang the door panel with a small angle to the door by locating the holes of the top bracket to the M8 studs (**B**), and rotate the door panel down so that the side attachment brackets slide onto the side screws of the door. (**C**)
3 Screw the M8 washer and nut to the stud (**D**), and re-tighten the side screws (**A**) to fix the door panel (do not fully tighten). This will allow opening the door without affecting adjustment of the door panel.

Note: We recommended to load the shelves in the appliance door with weights to ensure an accurate door panel gap width.

Weight recommendations:
- 457mm appliance: 10kg
- 610mm appliance: 15kg
- 762mm appliance: 20kg

Adjust the door panel

Note: Check the gaps between door panel/cabinetry using the gauge (3mm). All door panels have full axis adjustment to ensure they are flush with adjacent walls.

1 To adjust the height of the door panel relative to the door, use M4 hex key to turn the top M8 screw (**E**) clockwise to lower or counter-clockwise to raise the door panel until the gap with the cabinetry above is 3mm.
2 To adjust the depth of the door panel, loosen the side screws (**F**) from each side and slide the panel forward/backward. Re-tighten once satisfied.
3 To adjust the door panels further, remove the door panels then loosen the fixing screws for the hanging bracket and move the bracket sideways to suit. (**G**)
4 Once satisfied with the door panel position, fully tighten M8 washer and nut to the stud using a M4 hex key (**E**).

Fix the locking brackets

1 Loosen the screw at the bottom of the door, and slide the locking bracket out until it touches the panel (**H**).
2 Fix the locking bracket to the door panel with 8Gx16 countersunk screw (**I**).
3 Re-tighten the screw at the bottom of door (**J**).

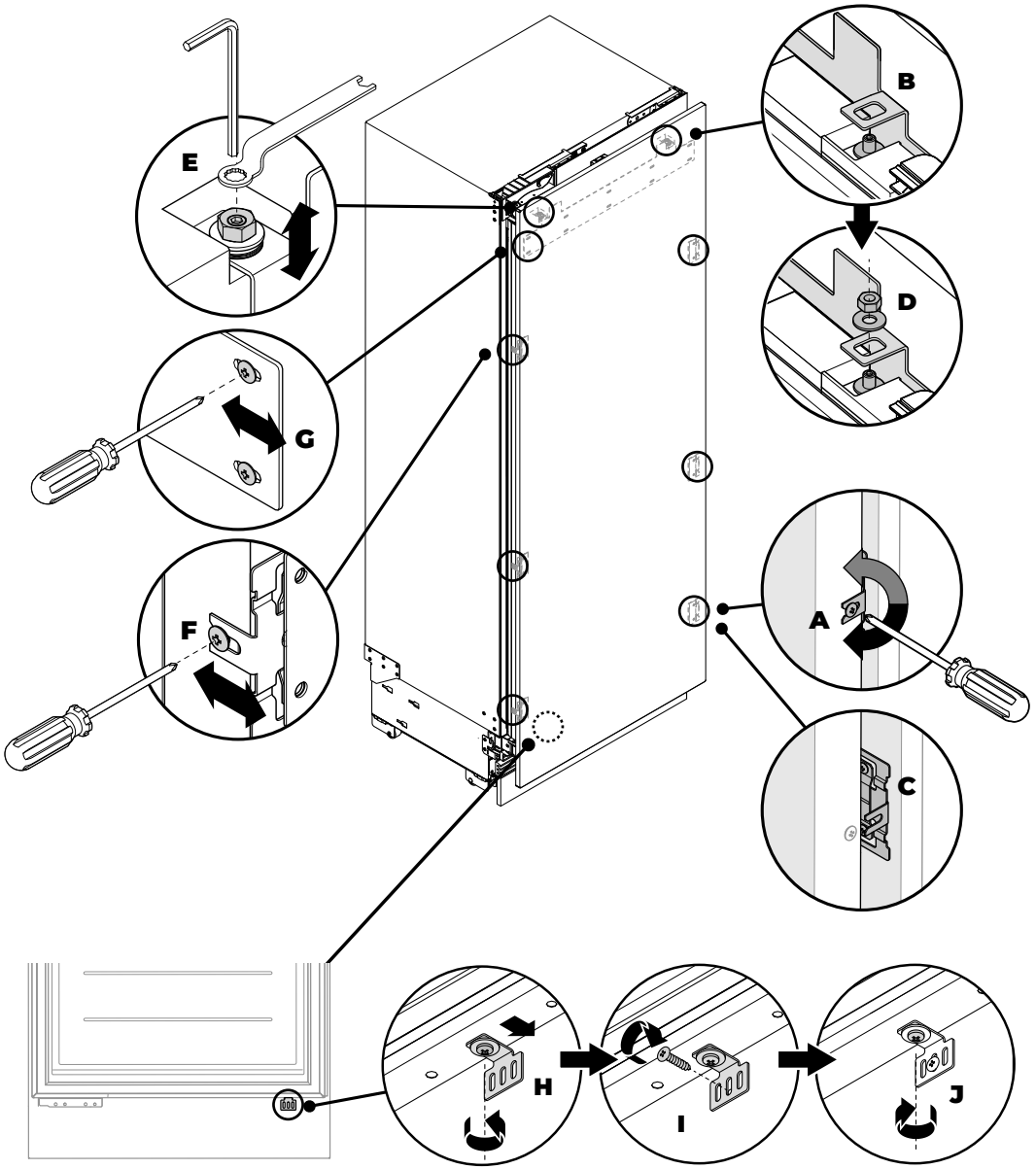

@2 TOE KICK INSTALLATION

Miscellaneous components



Air toe kick seal
(1)

Toe kick install kit

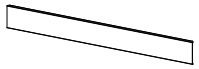

Toe kick
(1)

IMPORTANT!

Two magnets are pre-installed to the bottom corners of the toe kick mounting plate. Each magnet has double-sided tape to be attached to the toe kick. This allows both Stainless steel and Custom panels to be attached to the magnet.

Install the toe kick mounting plate and toe kick

1 Reattach the toe kick mounting plate (**A**) to the plinth with 8x16mm cross-head screws.
   - If the toe kick depth is less than 3 5/8 in (92mm), attach an air toe kick seal (**B**) to the middle of the back side of the mounting plate (**C**).

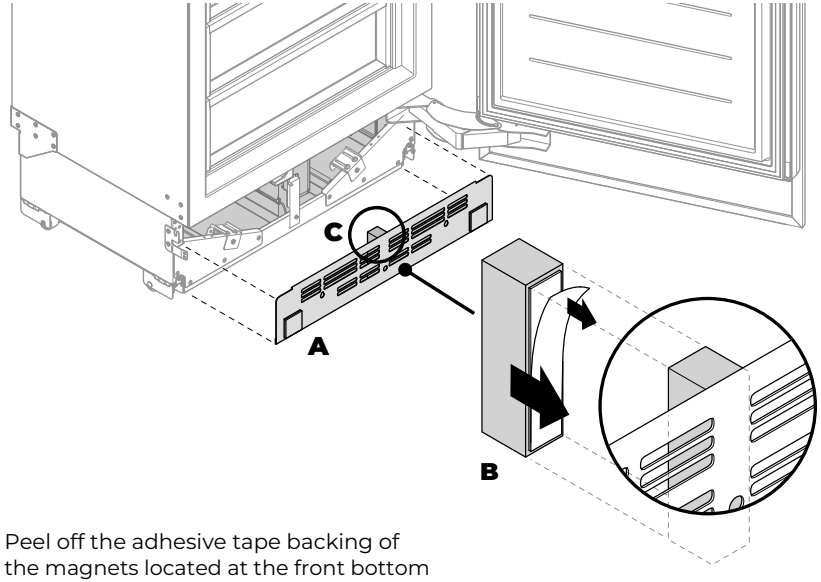

3 Peel off the adhesive tape backing of the magnets located at the front bottom corners of the toe kick mounting plate (**D**).

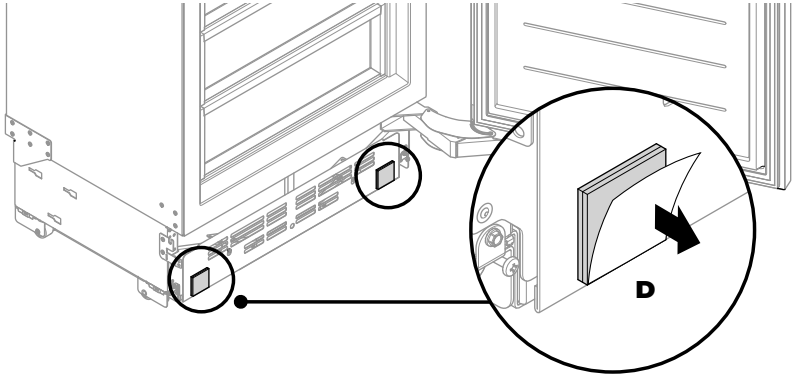

4 Place the toe kick in front of the mounting plate. Ensure that the spacers at the back of the toe kick are aligned with the magnets (**E**).
   - For custom toe kick, skip step 4 as spacers are not needed.

5 Attach the toe kick by pressing onto the mounting plate (**F**).
   - For stainless steel: Ensure the adhesive tape of the magnets adhere to the spacers of the toe kick.
   - Ensure the bottom of the toe kick contacts the floor as you attach to the mounting plate.

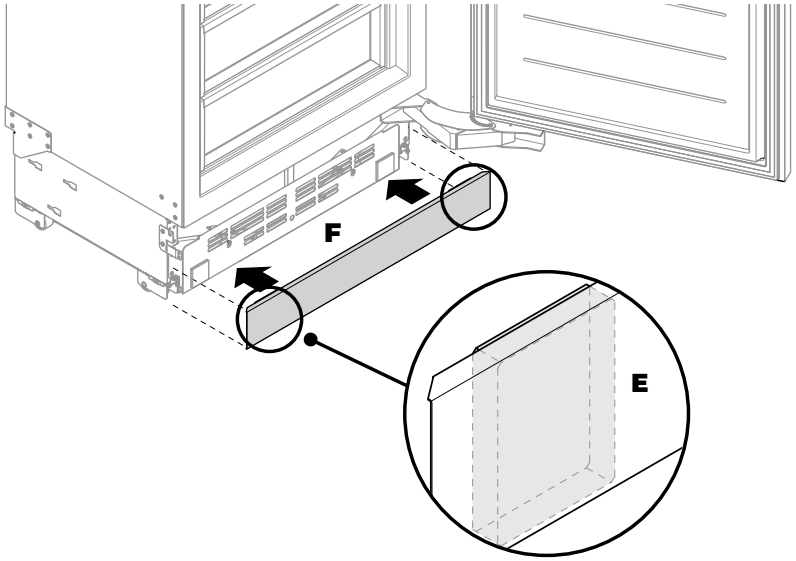

IMPORTANT!

- **For toe kick heights 114 – 127mm, shorten the lower grille by cutting along the vertical ribs.**
- **For 51mm toe kick height, an additional lower grille can be ordered.**
- **For toe kick heights greater than 127mm, lower grille is not required.**
-

@2 TOE KICK INSTALLATION

Toe kick grilles

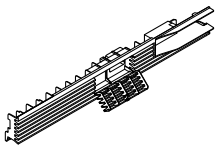

Top (fixed) grille
(1x)

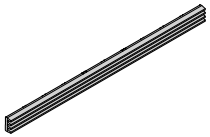

Bottom (movable) grille
(1x)

Tools

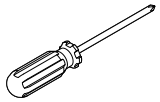

Cross-head screwdriver

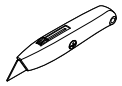

Cutter

Adjusting the toe kick grille

1 Loosen the cap screws of the adjustment brackets from both sides of the plinth using a hex key (**A**).
2 Adjust the toe kick to the desired depth by moving it forward/ backward (**B**).
3 Re-tighten the cap screws of the adjustment brackets on both sides using the hex key.

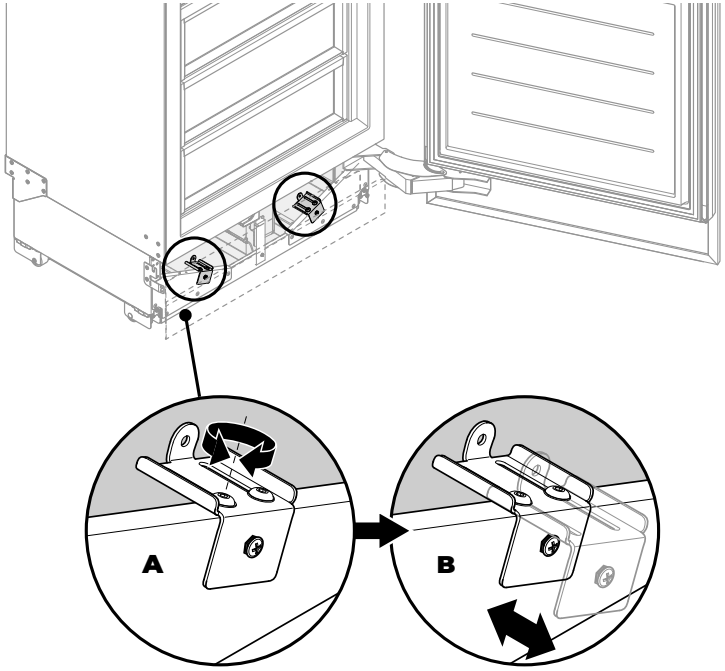

Attach the top and bottom grilles

4 Reinstall the top (fixed) grille (**C**) using the same screws set aside previously, and reattach the cover (**D**) to the bottom hinge pocket.

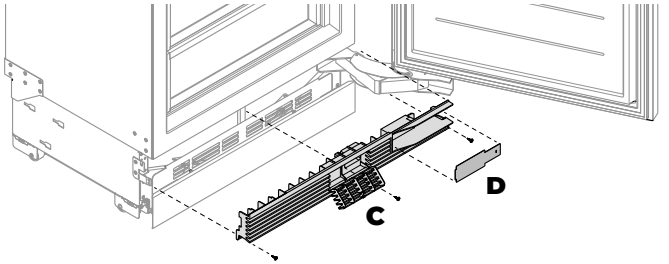

5 Reinstall the bottom (movable) grille (**E**) to the mounting plate.

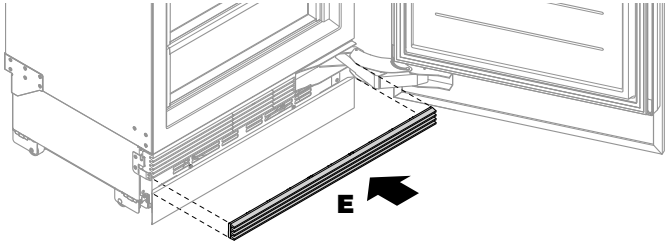

- For toe kick heights 114 – 127mm, shorten the bottom grille by cutting along the vertical ribs (**F**).

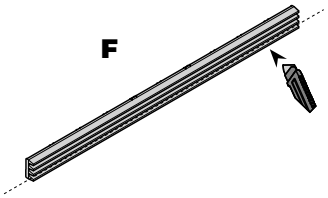

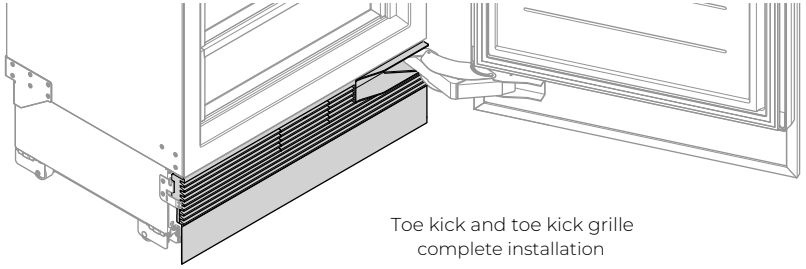

Toe kick and toe kick grille
complete installation

@3 CABINET TRIMS INSTALLATION

Install parts



Cabinet side trim assembly (2)



Dual-lock strip (4)

Tools

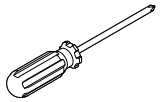

Cross-head screwdriver

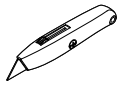

Cutter

Install the side trims

Note: Four (4) dual-lock strips are pre-installed along each side trim.

1 Peel off the liners from the dual-lock strips (**A**).



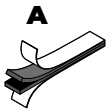

2 Position the trim on the throat with an angle (**B**).

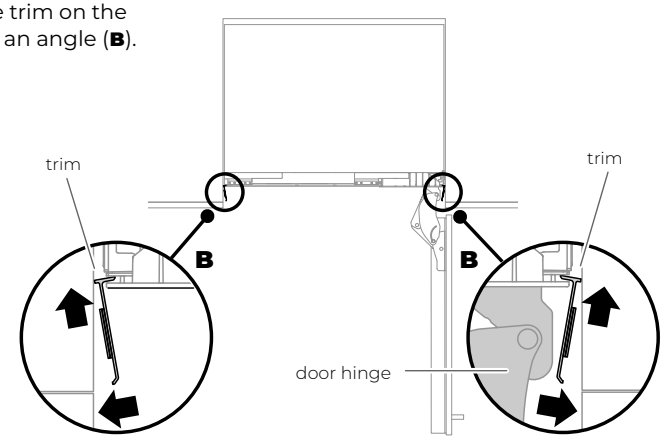

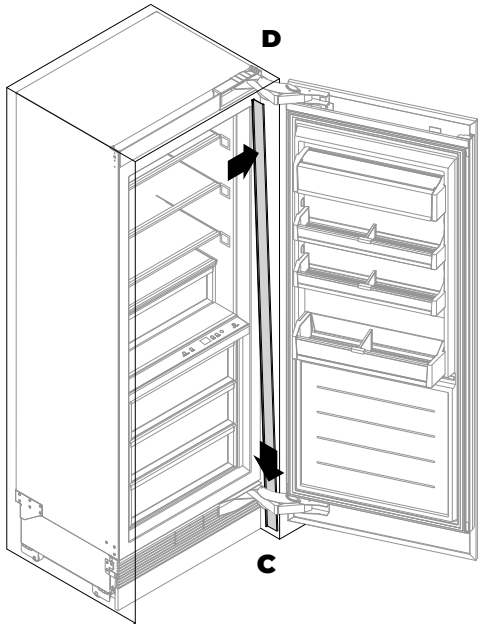

3 Slide the trim behind the lower hinge (**C**), then the top hinge (**D**). Hold the same angle when sliding the trim.

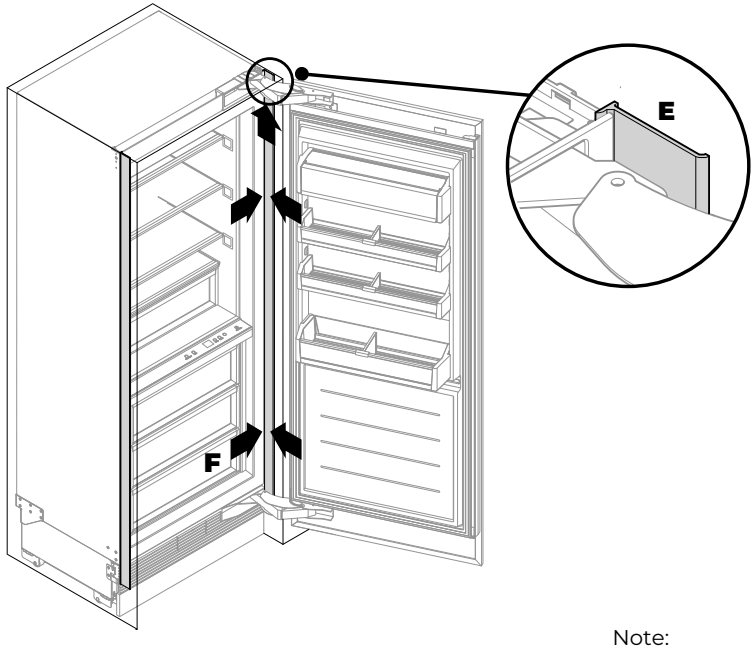

4 Slot trim in behind top hinge pocket (**E**), then press (**F**) adhesive to cavity ensuring trim is also tight against appliance inner face.

Note:

- Press firmly on the dual-lock strip locations to ensure the side trims are securely attached.
- For dual installation, do the same steps for each appliance.

Dual install joiner kit

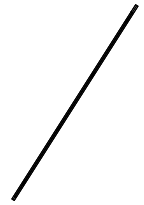

Centre trim
(1)



Dual-lock strip
(4)

Reinstall the top trim

1 Slide the top trim into hinge pocket of the cabinet (**A**), and then engage the dual lock at the non-hinge side (**B**).

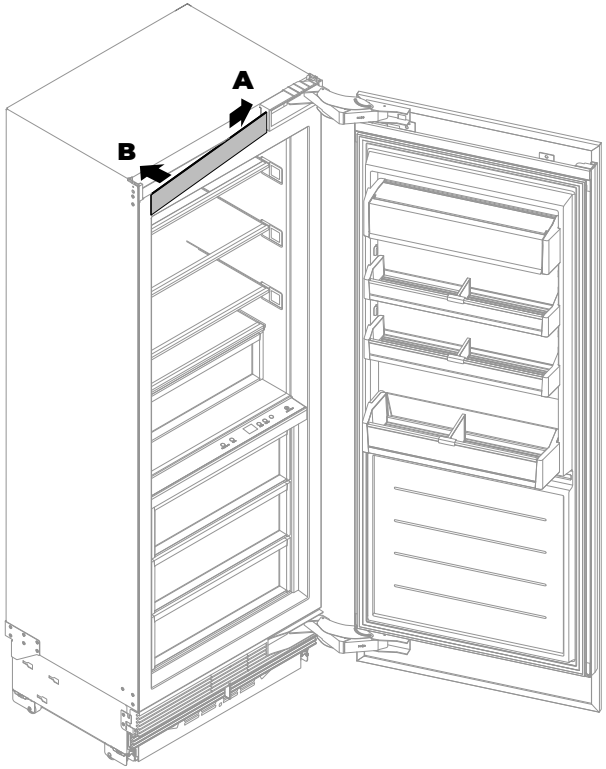

Install the centre trims (for Dual install only)

Note: Four (4) dual-lock strips are pre-installed along the centre trim.

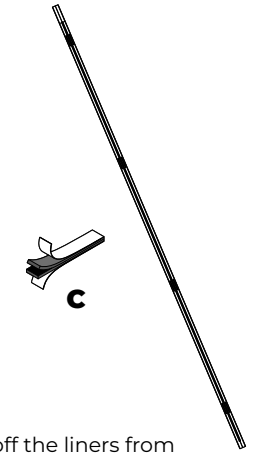

1 Peel off the liners from the dual-lock strips (**C**).

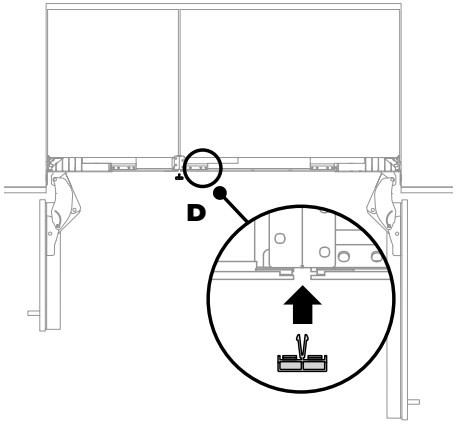

2 Position the trim between the throats of both cabinets (**D**).

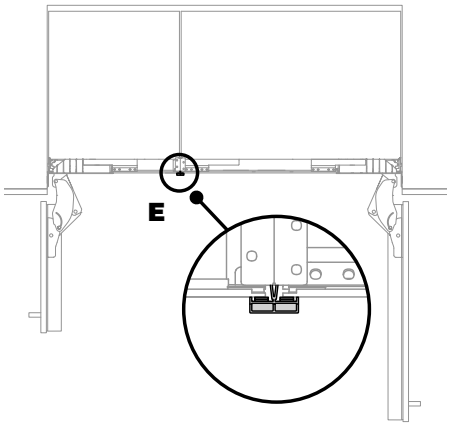

3 Push and press the trim on the appliances/throat (**E**).

Note: Make sure the top end of the trim is pushed up against the alcove ceiling before fixing the position.

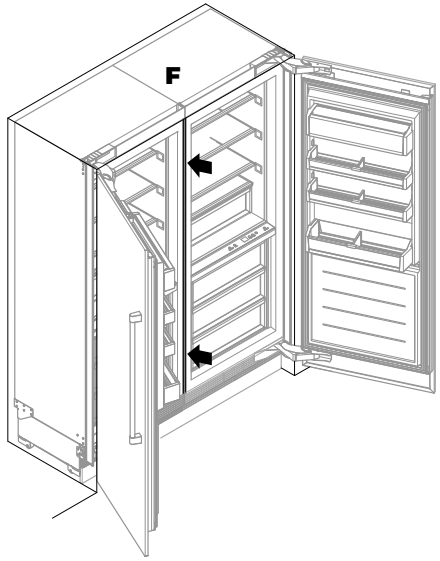

4 Press the centre trim to fix the position (**F**).

DOOR TRIMS INSTALLATION

Miscellaneous components

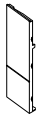

Flow divider cap (1)

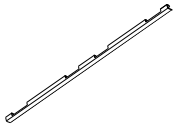

Door panel side extrusion (2)

Tools

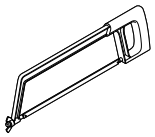

Hacksaw

IMPORTANT!

The door flow divider is pre-assembled to the door of the appliance. It blocks the air flow from bypassing in front of the bottom grille.

ReInstall the flow divider

1 Peel the adhesive layer off the flow divider (**A**).
2 Remove the 8Gx16 countersunk screw from the bottom of the door and re-install the flow divider using the same screw. (Do not tighten fully) (**B**).
3 Press the flow divider firmly against the door panel (**C**). Make sure the adhesive layer contacts the door panel.
4 Re-tighten the screw fully.

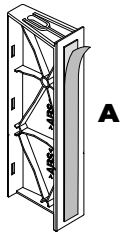

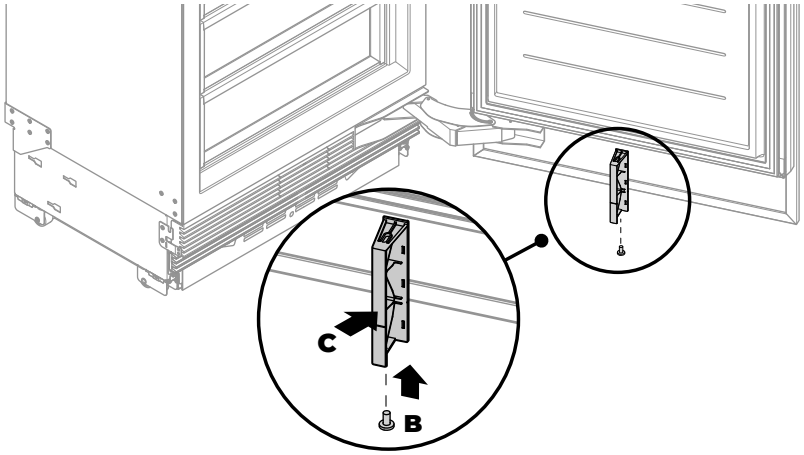

5 Attach the flow divider cap to the flow divider (**D**).

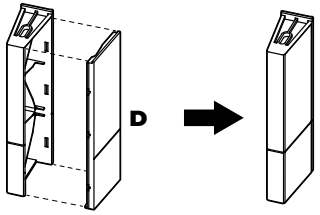

Note:
When fitting the air flow divider to the door for a toe kick height greater than 102mm, the divider requires shortening. Cut along the outline on both the divider and divider cover (**E**) before installation to the door. Ensure to file the cut portions of the divider and cover.

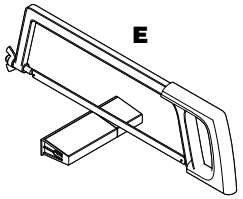

Install the door trims

1 Reinstall the door panel top extrusion to the top of the door.
   - Align the notch (**F**) of the extrusion with the magnet housing at the top of door (**G**).
   - Clip the trim caps (**H**) at both ends of the extrusion to the top of the door.
   - Press the top door panel extrusion down into the top of the door (**I**) so that the dual lock strips engage together.

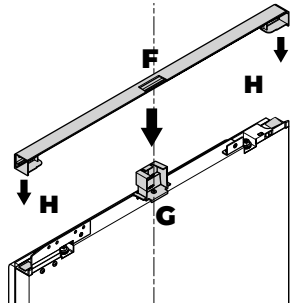

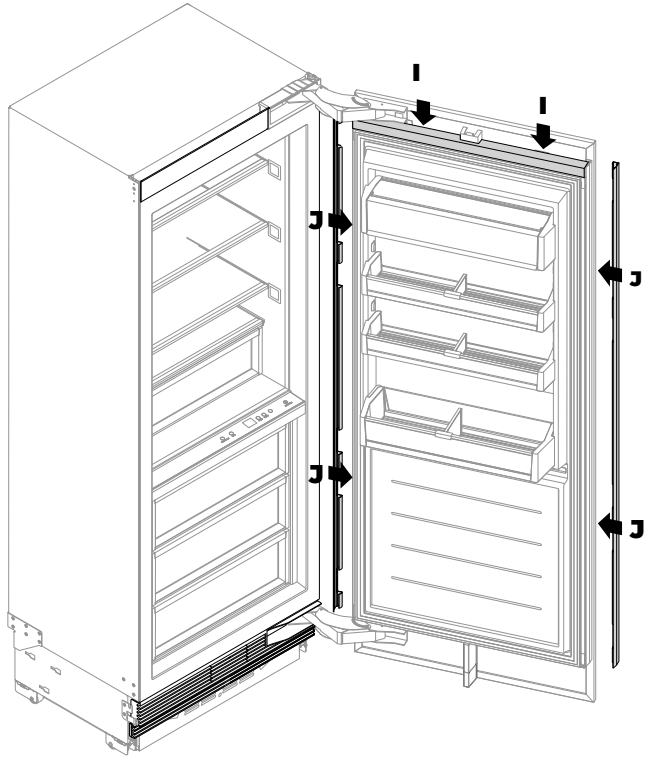

2 Press the door panel side extrusion (**J**) into the gap between the door and door panel. Align the top of the door panel side extrusion with the top door panel extrusion. Do on each side.

@5 OPTIONAL — CHANGING OVER DOOR HINGES

Tools

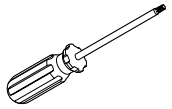

T2 star-head screwdriver

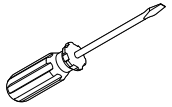

Flat-head screwdriver



Hex key

You have the option to change the door hinge side of your appliance from right hand hinge to left hand hinge or vice versa.
A hinge change kit is required for this installation.

IMPORTANT!

- **Ensure that you remove all the shelves, covers and trims from the appliance before changing the hinges. Take care not to damage the door.**
- **We recommend to lay the appliance (door closed) onto its back on the pallet when removing the door hinges.**

Removing the door

1 Release the hinge spring by turning the star T20 screws in the hinge to the 0 position (**A**).

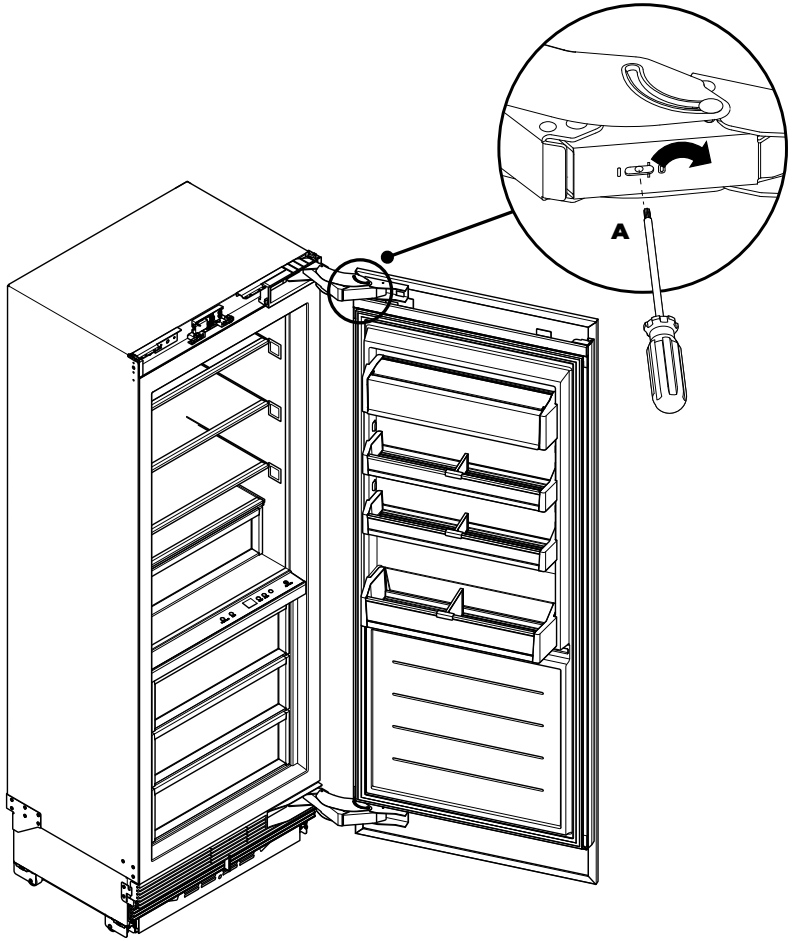

2 Close the door and lay the appliance on its back on the pallet.

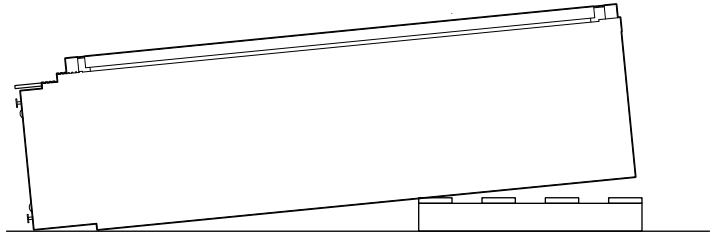

3 Detach the door from the appliance by unscrewing the door hinge M6x10 hex screws at the top (**B**) and bottom (**C**) hinges.

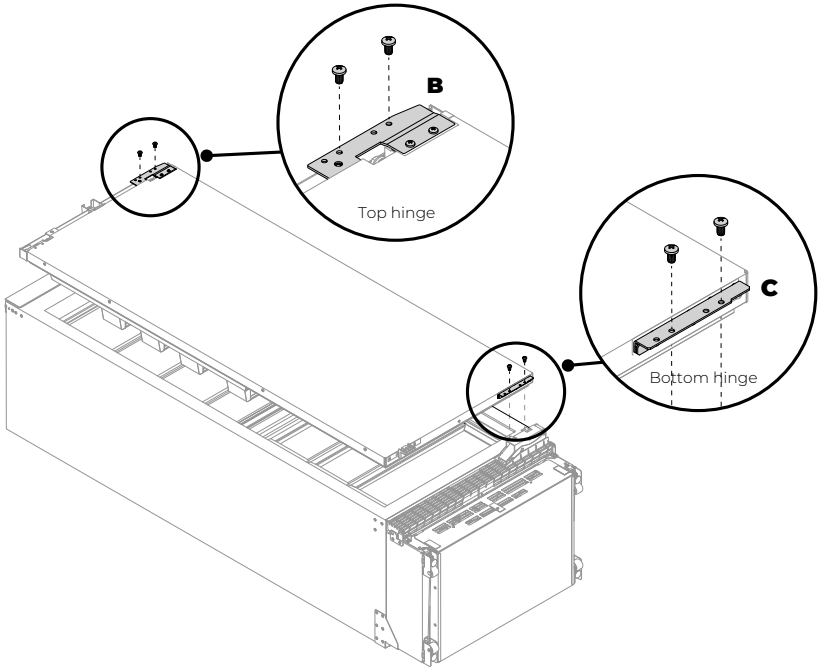

@5 OPTIONAL — CHANGING OVER DOOR HINGES

Tools

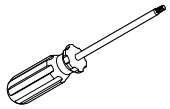

T2 star-head screwdriver

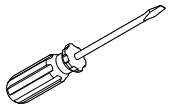

Flat-head screwdriver

Removing the top door hinge

1 Rotate the top hinge (**A**) outwards and remove the top hinge pocket cover (**B**) using the flat head screwdriver in the slot of the cover.
2 Remove the hinge by unscrewing the M5x12 pan head screws (2x) (**C**), and set aside for later use.
3 Remove the hinge pocket and top alcove bracket by unscrewing M5x12 pan head screws (2x) (**D**) from the hinge pocket.
4 Remove the top hinge bracket and spacer (**E**) by unscrewing the M5x12 countersunk screws (2x) from the top hinge bracket.
5 For the non-hinge side, remove the top alcove bracket by unscrewing the M5x12 pan head screws (2x) (**F**). **(Not applicable for RS46).**

Removing the bottom door hinge

6 Rotate the bottom hinge (**G**) outwards and remove bottom hinge pocket cover (**H**) using a flat head screwdriver in the slot.
7 Remove the hinge by unscrewing the M6x16 countersunk screws (2x) (**I**).
8 Open the water filter hatch on the bottom (fixed) grille and unscrew the #8x16 screw (**J**) while holding the grille in place.
9 Remove the bottom grille by unscrewing the #8x16 screws (**K**) from the bottom left and right of the grille.
!0 Remove bottom hinge bracket by unscrewing M6x16 countersunk screws (**L**).

IMPORTANT!
Do not remove plinth-to-cabinet retention brackets!

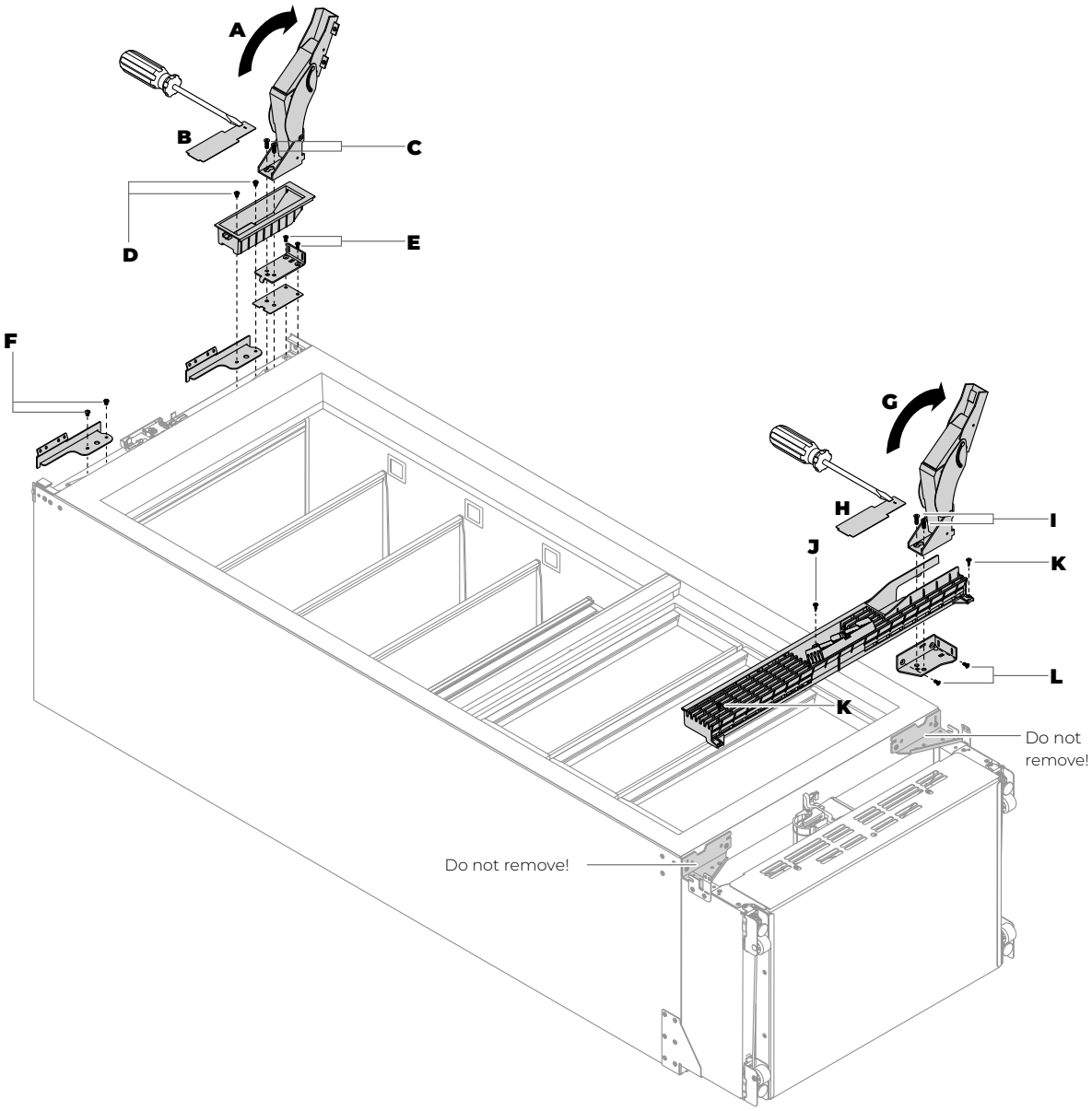

@5 OPTIONAL — CHANGING OVER DOOR HINGES

Tools

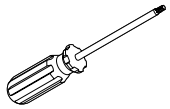

T2 star-head screwdriver

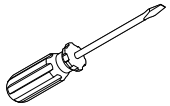

Flat-head screwdriver

Moving the sensor housing (RS46 & RS61 only)

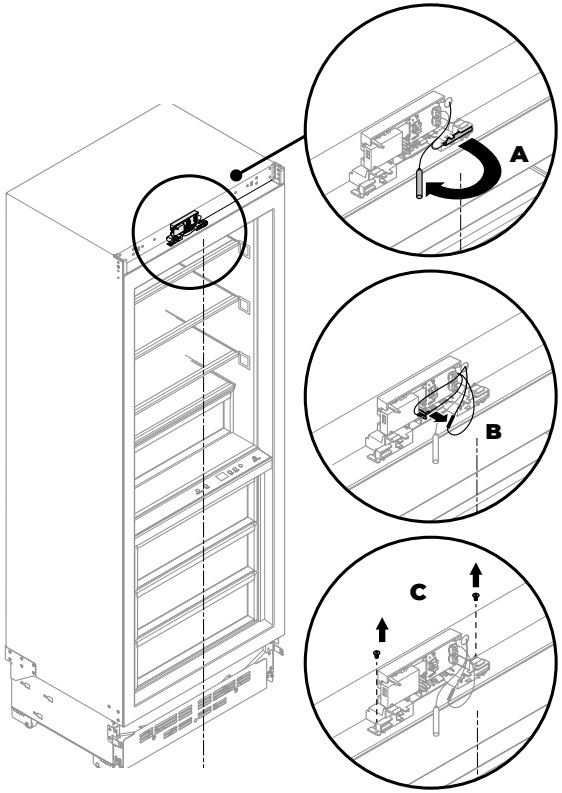

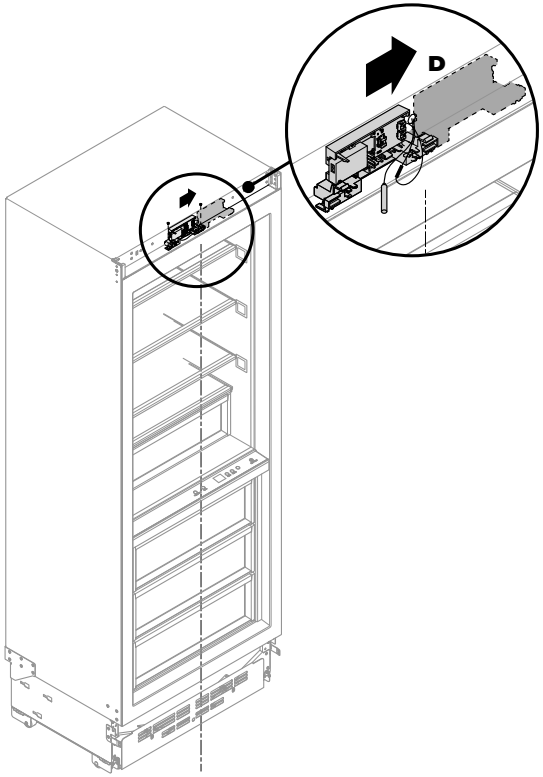

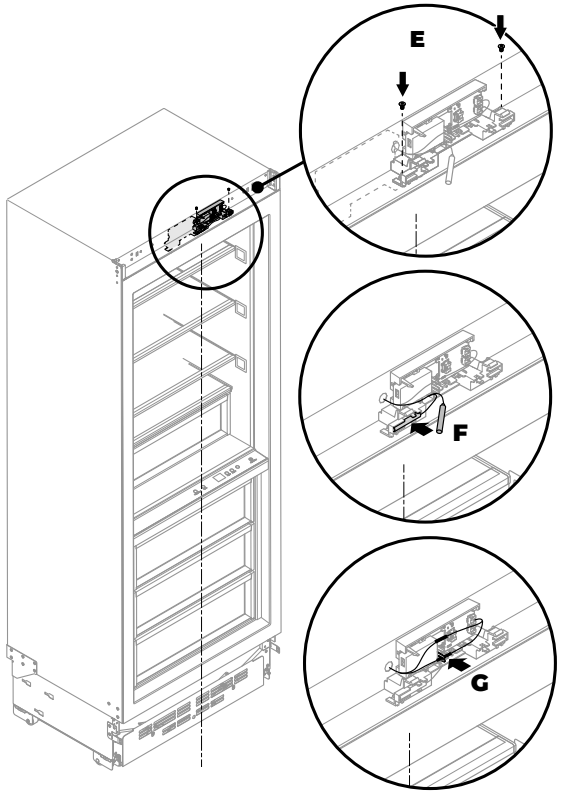

1 Unclip the reed switch from the housing (**A**).

2 Unhook the interceptor board harness from sensor housing so harness is loose (**B**).

3 Remove the #8x16 screws (2x) from the sensor housing (**C**).

4 Move the sensor housing so that the opposite reed switch clip is aligned with the centre of the cabinet (**D**).

5 Reinstall the sensor housing using #8x16 screws (2x) into the pre-drilled holes in the cabinet top panel (**E**).

6 Clip the reed switch into the sensor housing in the pocket closest to the centreline of the cabinet (**F**).

7 Press the harness from the interceptor board into the forks on the sensor housing (**G**).

@5 OPTIONAL — CHANGING OVER DOOR HINGES

Hinge change assembly

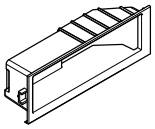

Hinge (right or left) top pocket (1)

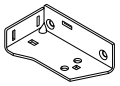

Lower (right or left) hinge bracket (1)

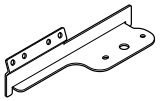

K05 top (right or left) adapter bracket (1)

Top (fixed) grille assembly

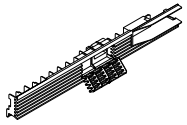

Top (fixed) grille (1)

Top hinge installation

1 Reinstall the hinge top bracket and bracket spacer with M5x12 countersunk screws (**A**) on the new hinge side at the other side of the appliance.
2 Install the new hinge pocket and alcove top bracket on the new hinge side using two (2x) M5x12 pan head screws (**B**).
Note: The new hinge pocket and alcove top bracket are supplied with the hinge kit.
3 Install the new hinge in the new hinge pocket by screwing M5x12 pan head screws (2x) (**C**). (Not applicable to RS46).
4 Open the hinge and reinstall the top hinge pocket cover (**D**) to the top hinge pocket.
5 Install a new alcove top bracket on the new non-hinge side. (Not applicable to RS46) (**E**).

Bottom hinge installation

6 Install a new lower hinge bracket on the new hinge side with M6x16 screws (2x) (**F**).
   –- Ensure that the tab on the top of the bracket inserts into the slot in the plinth front bracket.
7 Use the hinge that was removed from the top of the appliance and insert the tabs into the hinge lower bracket. Rotate the hinge into place and fix with M5x12 countersunk screws (2x) (**G**).
8 Open the hinge (**H**), and install the new top (fixed) grille assembly.
9 Fasten in place with #8x16 screws (3x) (**I**). One each at the bottom left and right of the grille and one behind the water filter hatch.
!0 Reinstall the bottom hinge pocket cover to the new hinge pocket (**J**).

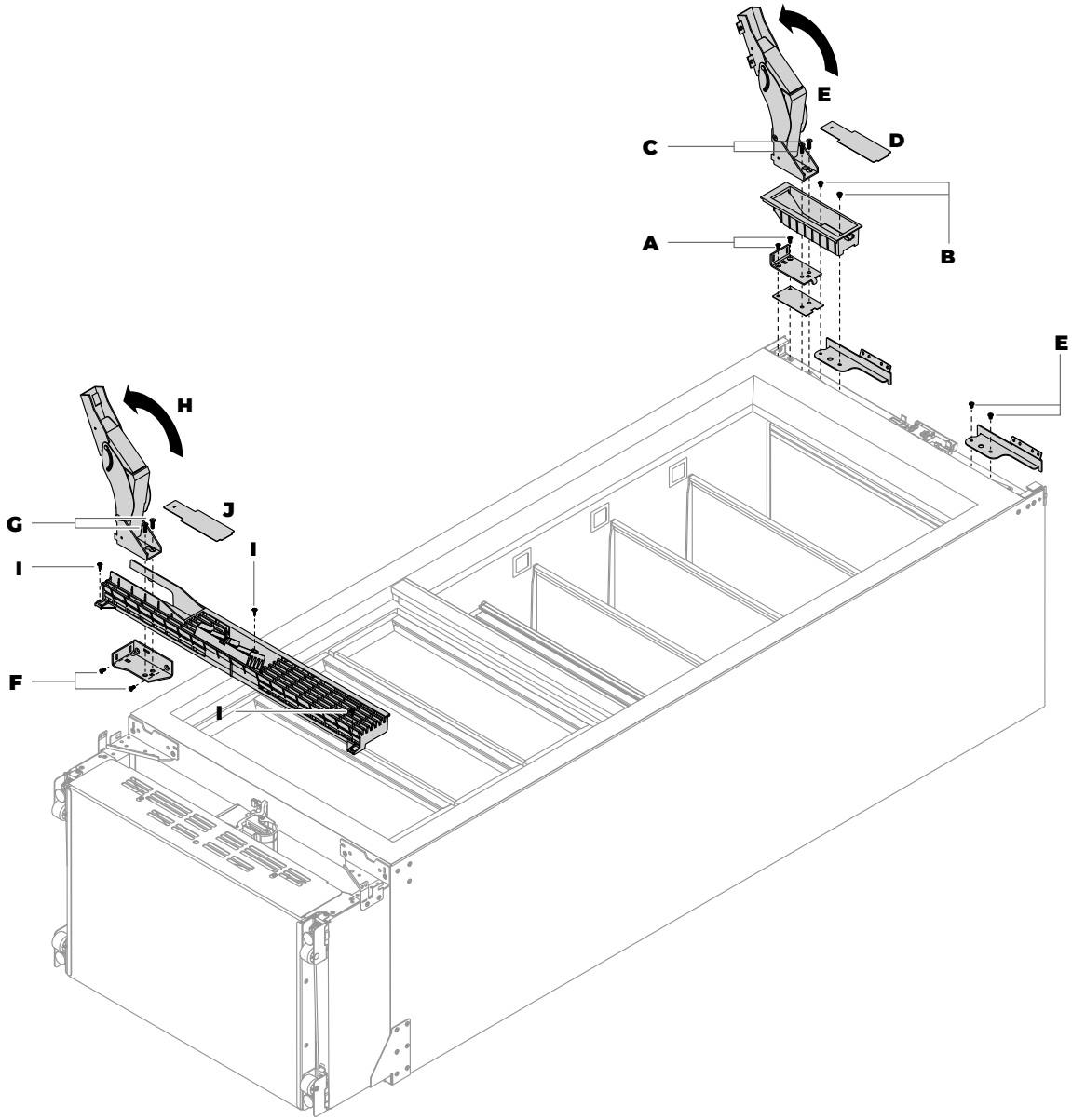

@5 OPTIONAL — CHANGING OVER DOOR HINGES

Hinge change assembly

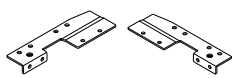

K05 top adaptor bracket R/L (1)

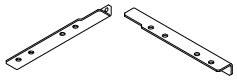

K05 bottom adaptor bracket R/L (1)

Tools

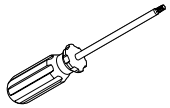

T2 star-head screwdriver

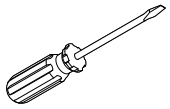

Flat-head screwdriver

Door brackets

1. Remove the top adapter bracket from the top of the door by unscrewing M5x10 screws (4x) (**A**).
2. Install the **new** top adapter bracket into the other side of the top of the door with M5x10 screws (4x) (**B**).
3. Remove the door panel locking bracket and washer from the bottom of the door by unscrewing M6x25 screw (1x) (**C**).
4. Remove the bottom adapter bracket and spacer from the bottom of the door by unscrewing M6x25 screws (2x) and M5x30 screw (1x) (**D**).
5. Install the **new** bottom adapter bracket and existing spacer to the other side of the door with M6x25 screws (2x) and M5x30 screw (1x) (**E**).
6. Install the **existing** door panel locking bracket and washer to the other side of the door with M6x25 screw (1x) (**F**).

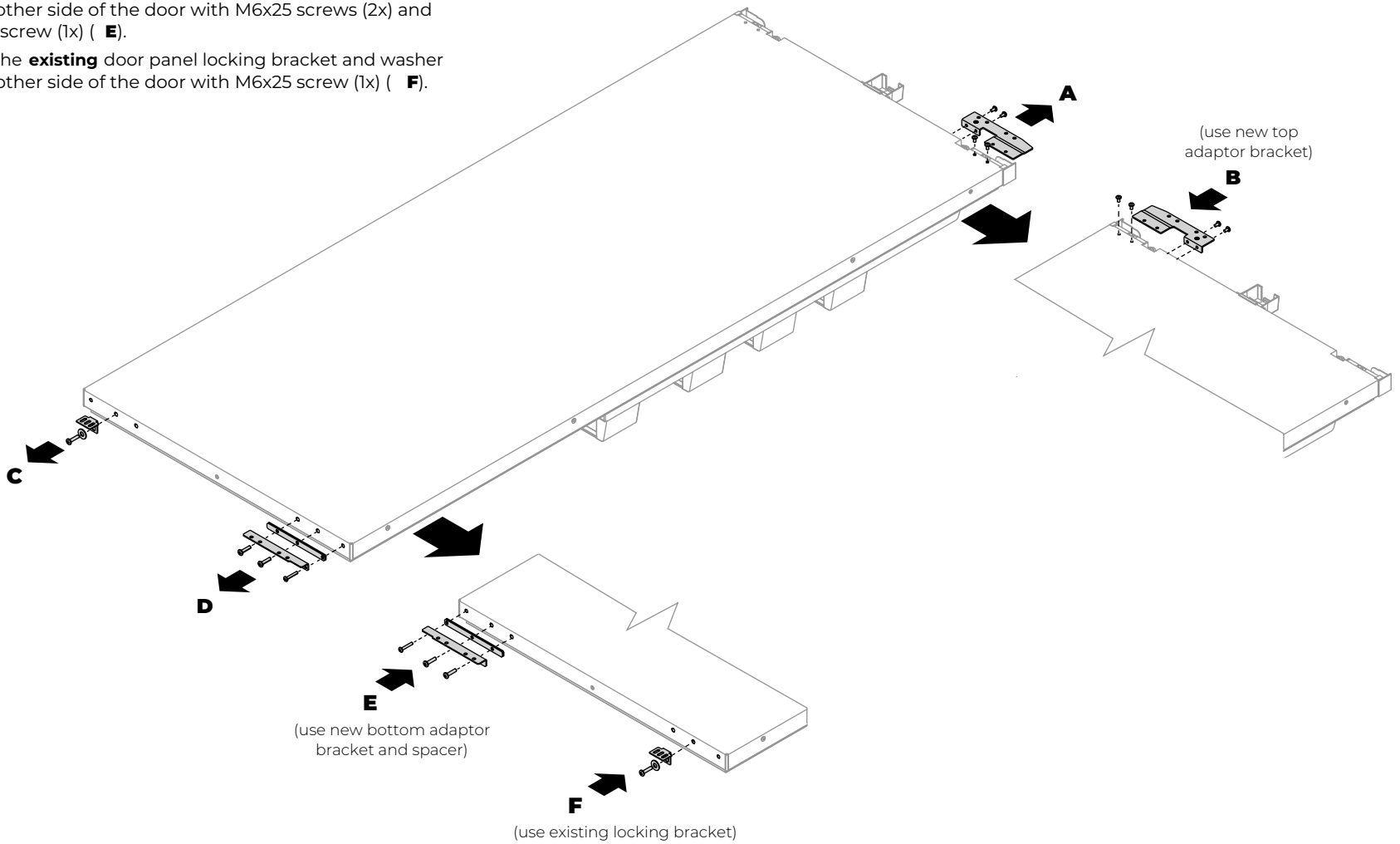

OPTIONAL — CHANGING OVER DOOR HINGES

Tools

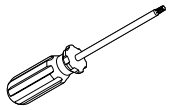

T2 star-head screwdriver

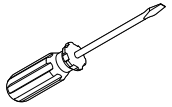

Flat-head screwdriver



Hex key

Door installation

1 Reinstall the door to the appliance by fixing M6x10 hex screws (4x) into the hinges (**A**).

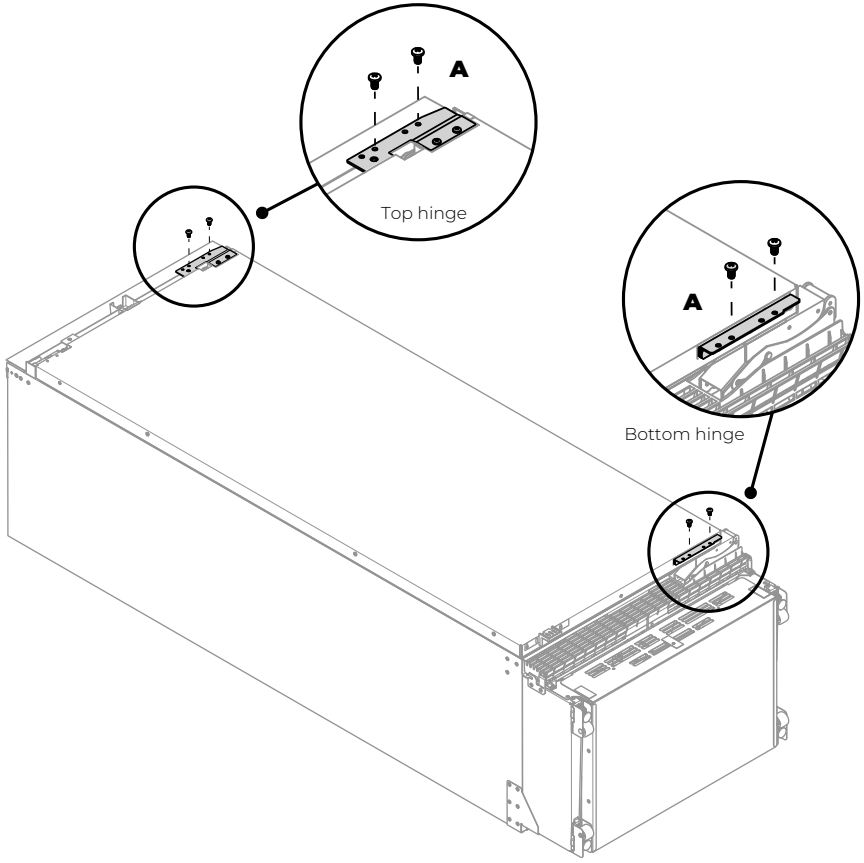

2 Activate the hinge spring by turning the star T20 screws to the I position (**B**).

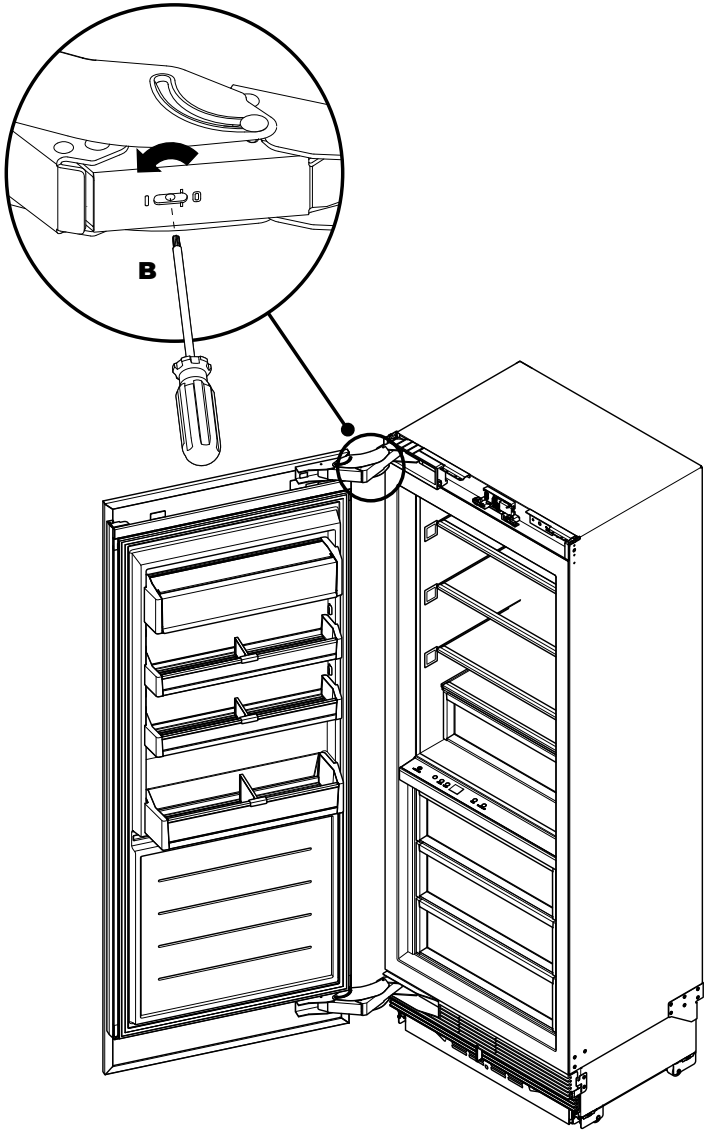

3 Return the appliance to the upright position.

4 Reinstall all covers and trims.

FINAL CHECKLIST

✓ **TO BE COMPLETED BY THE INSTALLER**

All models

- ☐ Check all parts are installed.
- ☐ Ensure the appliance is level.
- ☐ Ensure the appliance is securely fastened to the cabinetry with the supplied anti-tip bracket and fittings.
- ☐ Ensure the door/drawer can open and close freely with no resistance from surrounding cabinetry.
- ☐ Ensure hinge limiting bolt is fitted for 90° door swing.
- ☐ Ensure all internal and external packaging is removed from the appliance before use.

Freezer models only

- ☐ Ensure the water filtration system has been flushed.
- ☐ Ensure a manual ice maker cycle has been forced.

Complete and keep for safe reference:

Model _____

Serial No. _____

Purchase Date _____

Purchaser _____

Dealer Address _____

Installer's Name _____

Installer's Signature _____

Installation Company _____

Installation Date _____

FISHERPAYKEL.COM

© Fisher & Paykel Appliances 2019. All rights reserved.
The appliance specifications in this booklet apply to the specific appliances and models described at the date of issue. Under our policy of continuous appliance improvement, these specifications may change at any time. You should therefore check with your Dealer to ensure this booklet correctly describes the appliance currently available.

NZ AU GB EU