FISHER & PAYKEL

WASHER DRYER

WD9060J2

USER GUIDE

CONTENTS

Safety and warnings	4
First use	8
Loading suggestions	10
Setting a cycle	11
Cycles	14
Modifiers	16
Modifiers	17
Detergent and softener	18
Cleaning	19
Drum clean	21
Cleaning the dispenser drawer	22
Unlocking the door	23
Cleaning pump filter	24
Troubleshooting	26
Fault codes	34
Manufacturer's warranty and service guide	36

⚠ WARNING!



Electric Shock Hazard

Failure to follow this advice may result in electric shock or death.

- If you are using an extension cord or a portable electrical outlet device (e.g. multi-socket outlet box), ensure that it is positioned so that it does not come into contact with water or moisture.

READ AND SAVE THIS GUIDE

WARNING!

Read Safety Guide. Failure to follow all guides and rules could cause personal injury or property damage. Use this appliance only for the intended purpose as described in the user guide and installation guide of this appliance. When using this appliance, always exercise basic safety precautions including the following:

General

- Do not touch or operate the appliance with wet hands or with bare feet.
- A damaged power cord must be replaced by a Fisher & Paykel trained and supported service technician or similarly qualified person in order to avoid a hazard. Do not use the machine until it has been repaired to avoid a risk of electric shock.
- Do not operate this appliance if it has been damaged during transport. Contact your Fisher & Paykel dealer or Fisher & Paykel trained and supported service technician.
- This appliance is not intended for use by persons (including children) with reduced physical, sensory or mental capabilities, or lack of experience and knowledge, unless they are supervised or given instructions on how to use the appliance by someone responsible for their safety.
- Keep children away from the washer dryer while it is in operation.
- Supervise children to ensure they do not play with the appliance or climb inside the drum.
- Do not swing on or put weight on the door.
- In the event of a power outage any cycles will be paused when power is restored. Press start to resume the cycle.
- For problems that cannot be solved from information in the user guide, turn off and unplug your appliance and contact a Fisher & Paykel trained and supported service technician.
- Never attempt to repair the appliance yourself.
- Check and remove all objects from pockets, e.g. lighters and matches.
- Ensure any transit bolts have been removed before operating the appliance.
- The only user-removable parts of the washer dryer are the pump filter and dispenser. No other parts are designed to be removed by anyone other than a Fisher & Paykel trained and supported service technician.

SAFETY AND WARNINGS

- Do not overload your washer dryer beyond its rated capacity.

MODEL CODE	MAXIMUM WASH CAPACITY*	MAXIMUM DRY CAPACITY*
WD9060J2	9kg	6kg

*Capacity refers to the maximum dry weight of items the washer dryer can wash or dry at any one time

-

Water supply requirements:

- Inlet water pressure: Max. 1MPa (145psi), Min. 50kPa (7psi)
- Inlet water flow rate: Min. 0.3 litres/minute
- A pressure-reducing valve must be installed if pressure is higher than 1MPa.
- For optimum wash performance check the supply pressure is within the recommended range.
- New hose sets provided should be used to connect the appliance to the water mains. Old hose sets should not be re-used.
- We recommend the inlet hose(s) are changed every 5 years. **WARNING**: Failure to do so may result in a flood and damage to property.
- The cold water temperature should not exceed 35°C. Temperatures above this may cause the appliance to fault or cause damage to it.

Installation

- Install the appliance on a solid and level floor surface. Ensure it has at least 15mm clearance on each side, 15mm on the top, and at least 15mm clearance at the rear.
- The appliance must not be installed on any textured floor coverings (e.g. carpet, rugs).
- Do not install or operate this appliance on any other plinth or structure.
- Ensure the installation provides accessibility to the plug or incorporate a switch in the fixed wiring in accordance with the wiring rules to allow disconnection of the appliance from the supply after installation.
- The appliance must not be supplied through an external switching device, such as a timer, or connected to a circuit that is regularly switched on and off by a utility.
- We do not recommend the use of extension cords or portable electrical outlet devices for safety reasons.
- Exhaust air must not be discharged into a flue which is used for exhausting fumes from appliances burning gas or other fuels.
- The appliance must be installed in a well-ventilated, dust-free environment.
- The appliance must not be installed behind a lockable door, a sliding door or a door with the hinge on the opposite side to that of the tumble dryer, in such a way that a full opening of the tumble dryer door is restricted.

Disposal

- When disposing of this appliance, it is recommended that the door is removed to avoid children getting trapped inside, and that the electrical cable is cut off close to the washer dryer.

Spontaneous combustion

To reduce the risk of fire the following should be observed:

WASHING INSTRUCTIONS

- The washer dryer should only be used for washing, drying and rinsing of textiles where this is indicated on the care label.
- Do not add petrol, dry-cleaning solvents, or other flammable or explosive substances to the wash water. These substances give off vapours that could ignite or explode.
- Do not wash articles that have been previously cleaned in, washed in, soaked in, or spotted with gasoline, dry-cleaning solvents, or other flammable or explosive substances as they give off vapours that could ignite or explode.
- The door will be locked from the start of the cycle until the cycle is complete for safety reasons. It is possible to open the door during the cycle under certain conditions. Never force the door open.
- Do not touch the door during a cycle as the door can become hot.
- When 90°C temperature is selected, the door glass will become hot. Do not touch the glass part of the door. Keep children away from the washer dryer.
- Do not open the detergent dispenser during the cycle as water may come out of it.
- Read and follow the detergent manufacturer's instructions carefully. Instructions on how to use the detergent will be clearly indicated on the pack. Remember to store your detergents out of the reach of children.
- Do not wash an electric blanket in your washer dryer unless the care label specifically states it is safe to do so.
- Do not wash curtains in this machine, as sunlight makes them brittle and they may disintegrate during washing.

DRYING INSTRUCTIONS

- Undergarments that contain metal reinforcements should not be placed in the washer dryer. Damage to the appliance can result if the metal reinforcements come loose during drying. If you wish to dry these items use a drying rack or place in a garment bag.
- Items should go through the cooling phase in the final part of the cycle. This ensures items are left at a temperature where they will not be damaged. If for any reason the cycle is stopped before it has finished, dry clothes should be removed immediately and not left in the appliance. Items should be quickly spread out flat to cool so heat can dissipate, not left bunched up, e.g. In a clothes basket or in a pile.
- Never put dripping wet clothes in or on top of the washer dryer as excess water may cause an electrical hazard.
- Do not under any circumstances place any electrical, plastic or rubber items in the appliance, unless the care label specifically states it is safe to do so.
- Do not dry curtains in your washer dryer.
- Do not dry unwashed items in the tumble dryer.

WARNING!

- Never stop a tumble clothes dryer before the end of the cool down/ airing phase of the cycle unless all items are removed and spread out in order to dissipate the heat.

- Items that have been spotted or soaked with vegetable oil or cooking oil are a fire hazard and should not be placed in the appliance.
- Oil-affected items can ignite spontaneously, especially when exposed to heat sources such as this appliance. The items become warm causing an oxidation reaction in the oil. This oxidation creates heat. If the heat cannot escape the items can become hot enough to catch fire. Piling, stacking or storing oil-affected items can prevent heat from escaping creating a fire hazard.
- Items that have previously been cleaned in, washed in, soaked in or spotted with flammable liquids or solids, e.g. petrol/gasoline, kerosene, dry cleaning solvents, vegetable or cooking oil, acetone, denatured alcohol, some brands of spot removers, turpentine, waxes and wax removers or other flammable or explosive substances should not be placed in the appliance.
- If it is unavoidable that fabrics that contain vegetable oil, cooking oil or have been contaminated by hair care products be placed in this appliance, they should first be washed in hot water with extra detergent — this will reduce, but not eliminate the fire hazard. Use a cool temperature dry cycle to reduce the temperature of these items.
- The appliance is not to be used if industrial chemicals have been used for cleaning.
- When using **STEAM REFRESH** cycles on unwashed clothing ensure there are no flammable substances on them.

For more detailed information and comprehensive user and installation instructions, download the user and installation guides via www.fisherpaykel.com

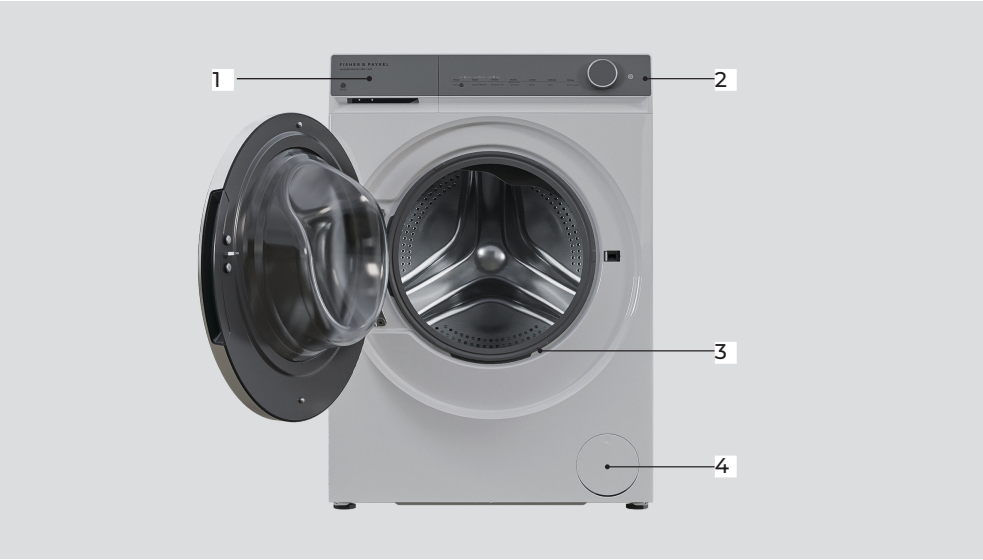

Features and accessories

1 Detergent/softener dispenser drawers

2 Control panel

3 Door seal

4 Pump filters

FIRST USE

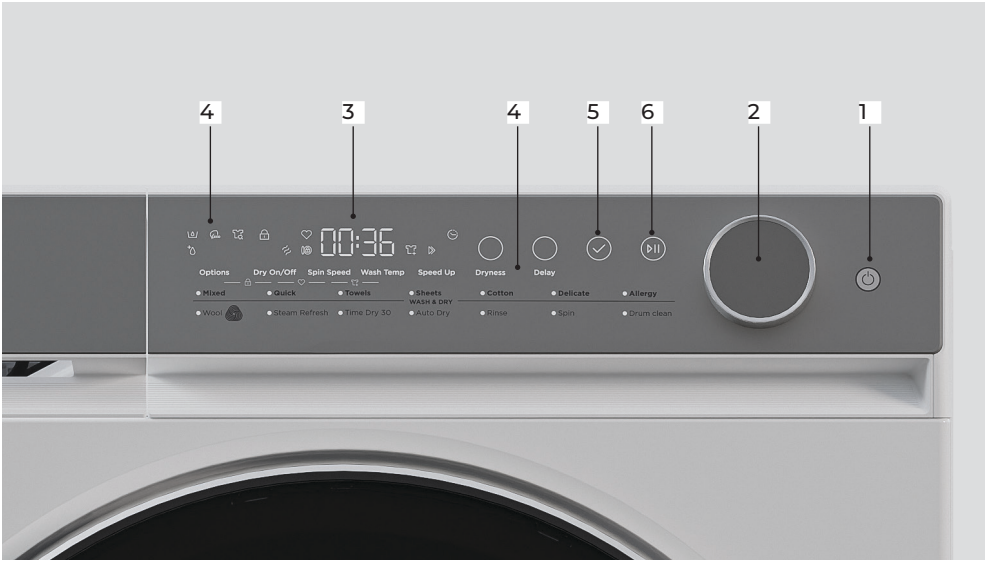

Control panel		
1	On/Off	Press to turn appliance on or off.
2	Dial	Use to navigate and select cycles, features, and settings.
3	Display	The display will show important information
4	Modifiers	After selecting a cycle, different modifiers can be selected
5	Confirm	Press to confirm cycle selection.
6	Start/Pause	Press to start or pause the cycle.

LOADING SUGGESTIONS

Sorting

- Sort items according to colour, fabric type, and soil type.
- Wash or dry fine, delicate fabrics separately from thick, heavy fabrics.
- Always separate coloured items from whites, especially when they are new.
- Colour run could be an issue if you wash items at higher temperatures or use delay start.
- Some soils, like mud and blood, are best washed in cold water.
- Close zippers, hooks and eyes, and other fastenings (i.e fasten the opening of duvet/ doona covers), and remove loose bra wires. These can damage your washer dryer and clothes.
- Items of clothing with screen print should be turned inside out to prevent damage to the print.
- Oily soils (e.g some foods and marks on shirt collars) are best washed in warm water.
- The care label will advise on how items should be washed and dried.

Before you load

- Loading items correctly will help to minimise creasing and wrinkling, and ensure the load is washed and dried evenly.
- Allow enough room in the washer dryer for clothes to tumble freely. Load washer dryer in terms if the space garments take up when dry, rather than when they are wet.
- Shake clothes out and load individually to help items dry evenly and reduce tangling.
- Check pockets for items that could damage your clothes or get caught in the machine.
- Hang garments as soon as washing or drying cycle is complete to reduce the need for ironing.
- Place delicate items, such as lingerie, in a mesh laundry bag before placing in the washer dryer.
- Pre-treat any stains, taking care not to spray pre-treaters on your washer dryer as they can cause damage to the plastic surfaces.
- Washing or drying very small loads is inefficient. Try to wash or dry medium to large loads.

Drying times

- Heavier items (towels, flannelette sheets) will take longer to dry then light items (synthetics and polyester cotton sheets and shirts).
- Drying times can be reduced by spinning the wash load at the highest spin speed suitable for the load type in your washer dryer.
- Check bulky items during the cycle to ensure even drying, pause the dryer and reposition the item if necessary.

Lint

Some items are lint givers, while others are lint collectors. Always dry lint givers and collectors separately.

LINT GIVERS	LINT COLLECTORS
Towels	Synthetics, e.g polar fleece
Flannelette Sheets	Corduroy
	Polyester cottons

SETTING A CYCLE

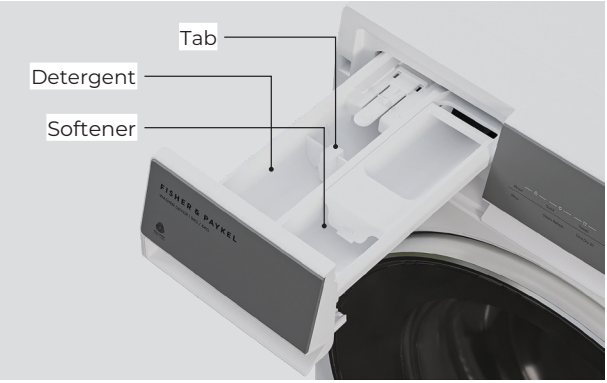

1. Add detergent to the main compartment and fabric softener to the softener compartment.

Raise the tab when using laundry powder, and lower the tab when using liquid detergent. Leave the remaining compartment empty, then close the drawer.



2. Place items in the washer dryer. For best results, wash or dry similar items together and do not exceed the maximum capacity for the selected cycle.

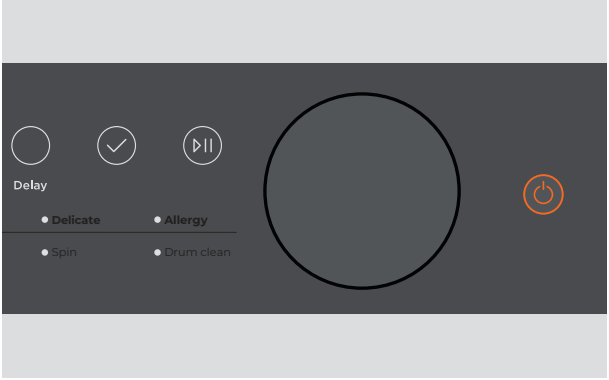

3. Press the power button to turn on.

SETTING A CYCLE

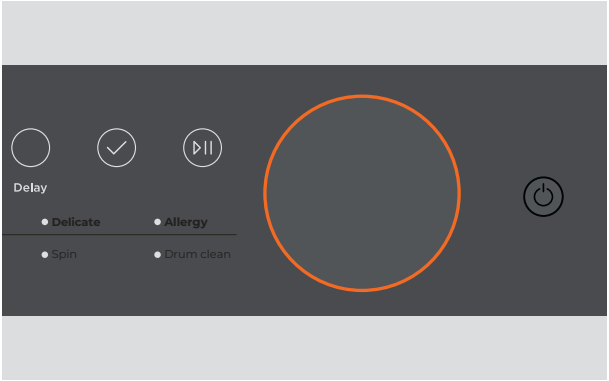

4. Use the dial to select your preferred cycle. Refer to 'First use' for cycle descriptions.

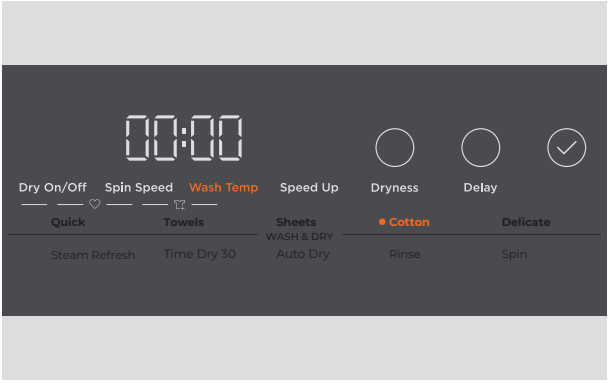

5. Select the desired modifiers.

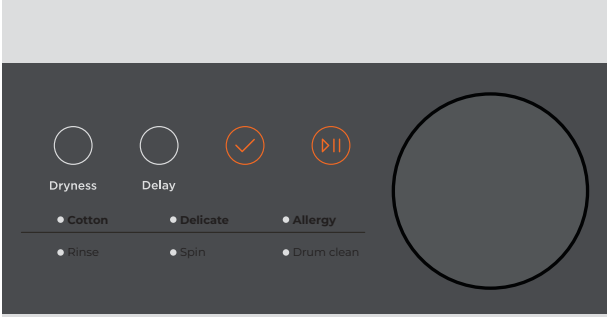

6. Press **CONFIRM**, then **START/ PAUSE** to begin the cycle.

SETTING A CYCLE

Pausing a cycle

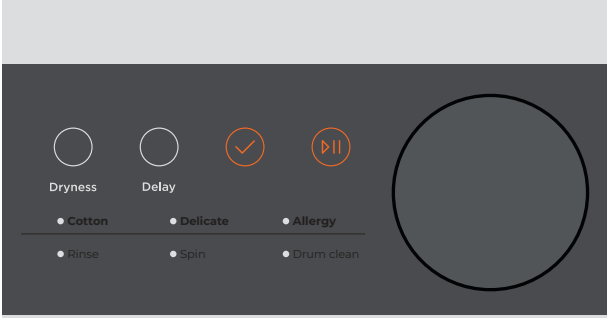

Press **START/PAUSE** to pause cycle. The door will stay locked if the water level is high or the temperature is too hot. It will unlock automatically once it's safe to open.

Changing the cycle mid-wash

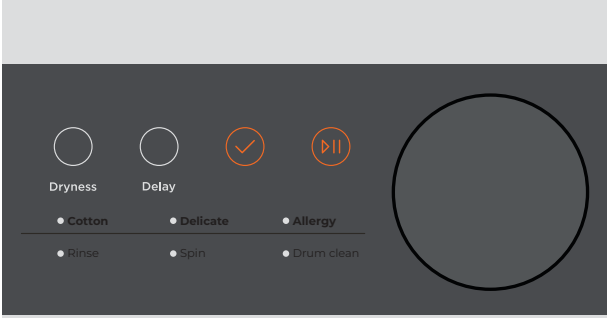

Press **START/PAUSE** to pause the cycle. Turn the dial to select a new cycle, then press **CONFIRM** followed by **START/PAUSE** to begin the new programme.

Cancelling a cycle

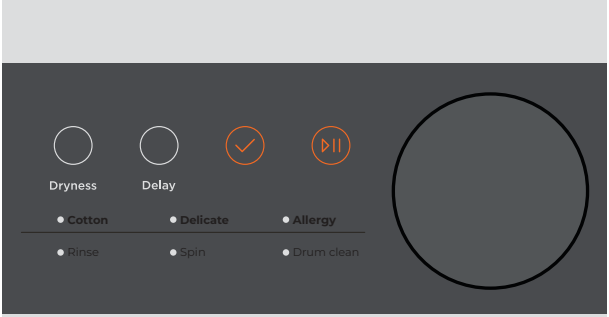

Press **START/PAUSE** to pause the cycle. Press and hold **POWER** to turn the washer dryer off and cancel the cycle.

If there is water remaining in the drum, turn the washer dryer back on, select **SPIN** to drain the water before starting a new cycle.

CYCLES

Your washer dryer has a number of cycles to suit your fabric care needs. Selecting the most appropriate cycle for each particular load will help ensure you get the best results.

CYCLE	DESIGNED FOR	MAX WASH LOAD SIZE (KG)	MAX DRY LOAD SIZE (KG)	WASH TEMP[2] (°C)	SPIN SPEED (RPM)
MIXED	A normal wash action for your mixed everyday loads including synthetics, cottons and blends.	9	6	60	1400
QUICK	A short cycle for lightly soiled items.	1	1	40	1400
TOWELS	A cycle designed for washing towels.	9	6	90	1400
SHEETS	A wash tailored to washing bed linen.	7	3	60	1000
COTTON[1]	Warmer wash for cotton clothing.	9	6	90	1400
DELICATE	Gentle wash action with slow spin speed.	2	1	30	600
ALLERGY	Increases temperatures and extra rinses to remove allergens.	9	6	90	1400
WOOL[2]	Extra gentle wash action that meets the Woolmark cycle requirements.	2	-	40	800
STEAM REFRESH		1	-	-	-
TIME DRY 30		9	-	-	-
AUTO DRY		-	6	-	-
RINSE	A quick cycle for rinsing items. This includes a spin cycle after rinsing.	9	-	-	1000
SPIN	A quick cycle to remove excess water from items.	9	-	-	1000
DRUM CLEAN	A hot cycle to clean the buildup of dirt between the inner and outer bowls.	-	-	90	-

CYCLES

Energy and Water Label Cycle

The cycle for energy and water labelling in accordance with AS/NZS 2040:2021 and AS/NZS 6400:2016 is as follows: Cotton, Dry: OFF, Spin Speed: 1400, Wash Temp: 40°C. This cycle is the recommended energy and water saving cycle for normally soiled everyday washing, equal to the rated capacity.

Note for Testing Laboratories: The powder detergent is placed directly into the bottom of the drum. No more than the maximum amount of anti-foaming agent is then placed into the bottom of the drum followed by the PBIS solution. The load is then added in accordance with AS/NZS 2040:2021.

Energy Label Cycle

The cycle for energy labelling in accordance with AS/NZS 2442:2021 is as follows: Auto Dry, Dryness: L3, Spin Speed: 1400. This cycle is the recommended energy saving cycle for everyday drying, equal to the rated capacity.

[2]Woolmark Wool Care

The wool wash cycle of this machine has been tested and approved by The Woolmark Company for the washing of machine washable wool products provided that the products are washed according to the instructions on the garment label and those issued by the manufacturer of this washing machine.

M2111 (WD9060J2).

WOOLMARK
WOOL CARE

MODIFIERS

Options

Press **OPTIONS** to toggle available functions for the selected cycle. Icons light up when active.

- **SOAK** – Adds a 60-min soak during wash.
- **ADD RINSE** – Adds an extra rinse.
- **ECO MODE** – Reduces energy and water use.
- **STAINS** – Helps remove oil-based stains.

Dry On/Off

Press **DRY ON/OFF** to disable drying when using a Wash+Dry cycle. The cycle will run as wash-only when off.

Spin Speed

Press **SPIN SPEED** to select spin speed: 0 / 400 / 600 / 800 / 1000 / 1200 / 1400 rpm.

Wash Temp

Press **WASH TEMP** to adjust wash temperature. When the display shows --°C, the wash will run without heating.

Speed Up

Before starting, press **SPEED UP** to shorten the cycle. When active, the icon lights and wash time reduces by approximately 30%

Dryness

Press **DRYNESS** to select dryness level. **L1** ironing-dry, **L2** ready-to-wear (default), **L3** storage-dry. Not available with 30, 60, 90, 120 minute drying times.

MODIFIERS

Delay Start

Press **DELAY** to set a delay start from 1 to 12 hours (in 1-hour increments). Press **CONFIRM** to activate. Delay is not available on **SPIN**, **REFRESH**, or **DRUM CLEAN** cycles.

Favourite

Select a cycle and your preferred settings, then press **DRY ON/OFF** + **SPIN SPEED** for 3 seconds to save as a Favourite. The heart icon will illuminate when saved. Next time you select this cycle, it will automatically load with your saved settings.

Add Garment

Select **SPIN SPEED** + **WASH TEMP** during a cycle to activate Add Garment. The cycle will pause when safe to open the door. Add clothes, close the door, then press **CONFIRM** and **START/PAUSE** to resume.

Keylock

Select **OPTIONS** + **DRY ON/OFF** to enable keylock. When keylock is activated the control panel will be locked. Cycles are unable to be paused while keylock is on, use power button to stop a cycle if required. The cycle resumes once product is powered on.

Reset favourites to factory default

Select the **QUICK** cycle, then press **SPIN SPEED** + **WASH TEMP** + **DRYNESS** for 3 seconds. dEF will appear on the display and favourited cycles will return to default settings.

DETERGENT AND SOFTENER

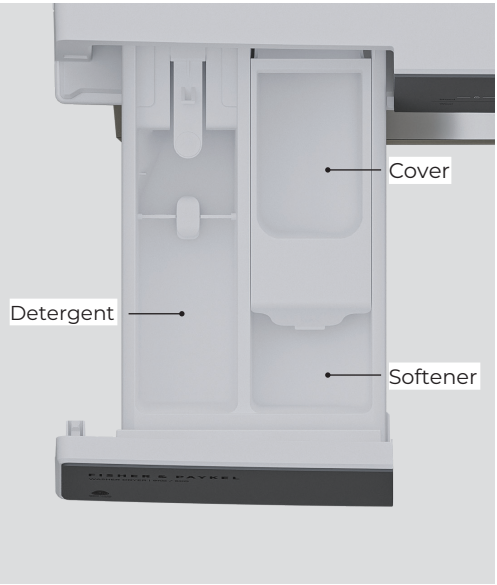

Detergent

Only use detergent designed for your washer dryer. Your appliance requires low-sudsing detergent to prevent oversudsing problems.

Ensure that detergent and softener are filled correctly into their respective compartments. Raise the cover when using laundry powder, and lower the cover when using liquid detergent. Do not add detergent or softener to the cover.

Do not overfill the detergent compartment. Too much detergent could result in water and detergent spilling onto the floor.

Ensure the dispenser is completely closed before starting the cycle. Do not open it again until the cycle is complete and the washer has stopped spinning.

Detergent advice

If you have noticed unpleasant odours in your washer dryer, you may not be using enough detergent for the soil level in your loads. Run a **DRUM CLEAN** cycle then try using a high detergent dose.

If you find foam leaking from your washer dryer, ensure you are using a low-sudsing for front loader type detergent.

Check the quantity you are using against the manufacturer's recommended dose on the label. You may need to adjust the amount you are using.

Fabric softener

The Washer Dryer will automatically flush the fabric softener during the rinse part of the cycle.

- Fabric softener cannot be used on **STEAM REFRESH**, or **SPIN** or **DRUM CLEAN** cycles.

Fabric softener advice.

- Clean your dispenser regularly.
- Clean your washer regularly using the **DRUM CLEAN** cycle.
- Complete wash cycles at a wash temperature at 40°C or above at regular intervals (eg every 5th wash) as washing in cold water increases the chance of waxy build-up occurring.

Waxy build-up can occur within any washer dryer when fabric softener comes in contact with detergent. This build-up is not brought about by a fault in the washer dryer. If allowed to build up in the machine it can result in stains on clothes and an unpleasant smell in your appliance.

CLEANING

Turn the machine off at the wall before doing any cleaning or maintenance.

Surfaces

Wipe with damp cloth and mild detergent, then dry with clean, lint-free cloth.

We do not recommend using the following cleaning products as they may cause damage:

- Plastic or stainless steel scouring pads
- Abrasive, solvent, household cleaners
- Acid or alkaline cleaners
- Hand washing liquids or soap
- Stainless steel cleaners or polishes
- Laundry detergents or disinfectants

Cleaning the drum and the door

- Use a soft damp cloth to wipe door, cleaning any water marks or residue off it.
- Wipe the rubber seal around the door to prevent odours. Remove any items or lint and wipe out any water.
- Remove dirt or lint from the drum and wipe it clean. Do not leave metal objects in the drum as these may rust and cause staining.
- Leave the door open when not in use to prevent odours. Keep children and pets away from the washer dryer so they cannot become trapped inside it.

Cleaning the hose(s)

Each hose contains a filter to stop contaminants in the water from entering your washer dryer.

Occasionally, disconnect the hoses where they connect to the taps and wash out any dirt build-up.

Moving your machine

- Remove the dispenser drawer and empty out any detergent or softener. Refer to 'Cleaning the dispenser drawer.'
- Clean the pump filter and ensure any water in the washer dryer is drained. Refer to 'Cleaning the pump filter.'

CLEANING

Things that could harm your machine.

- Concentrated bleaches, laundry pre-soakers/sanitisers, stain removers and hydrocarbon solvents (e.g petrol and paint thinners) can cause damage to the surfaces e.g control panel, and components of your washer dryer.
- Be careful when washing items stained with solvents, as they are flammable. DO NOT dry them in the appliance using a dry cycle or wash-and-dry cycle.
- Use of dyes in your washer dryer may cause staining of the plastic components. The dye will not damage the appliance but we suggest you thoroughly clean your washer dryer.
- Nappy sanitisers and bleach are very corrosive to metal surfaces. DO NOT tip the contents of a nappy bucket into your appliance. Rinse and wring items out thoroughly before placing them in the washer dryer.
- Build up in the pump filter can cause blockages and damage to the machine. Ensure regular cleaning.
- Objects like coins, keys, or pens can cause damage to the drum and internal components of your washer dryer, remove before washing or drying.
- Failing to perform regular maintenance, such as cleaning the drum, gaskets, and filters, can lead to build-up of residue, mold, and mildew, which can impact performance and cause damage.

Saving water, energy and the environment

Water efficient combi washer dryer machines will save you money, but it is also worth thinking about energy use, recycling water and the environment. Some options to consider are:

- Turn off the taps when not in use.
- Select cooler wash temperatures.
- Wash full loads rather than several smaller loads.
- Use the **ECO** wash function (where available).
- Follow instructions on the detergent packet or bottle – do not overdose.
- Consider re-using the machine's grey water on the garden or for flushing your toilet – more information can be found on government websites promoting energy and water saving.

DRUM CLEAN

Run the drum clean cycle regularly to clean your machine.

- Ensure the drum is empty.
- Add washing machine cleaner directly into washer dryer drum.
- Follow the manufacturers instructions for recommended dosage.



1. Turn the dial to select **DRUM CLEAN** , then press **CONFIRM** followed by **START/PAUSE** to begin the cycle.

CLEANING THE DISPENSER DRAWER

Check and clean the dispenser drawer regularly to remove build-up. Turn the machine off at the wall before cleaning these parts.

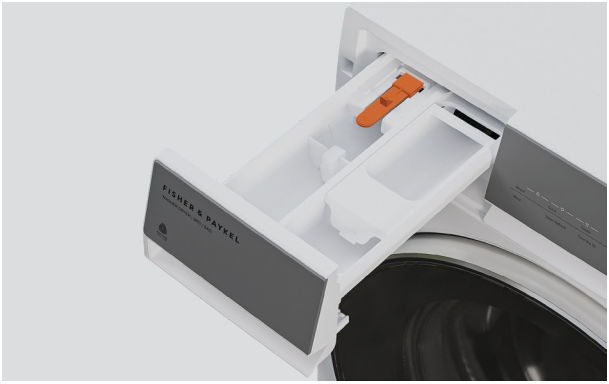

1. Pull the drawer out as far as it will go, press the release tab, and remove it from the machine.

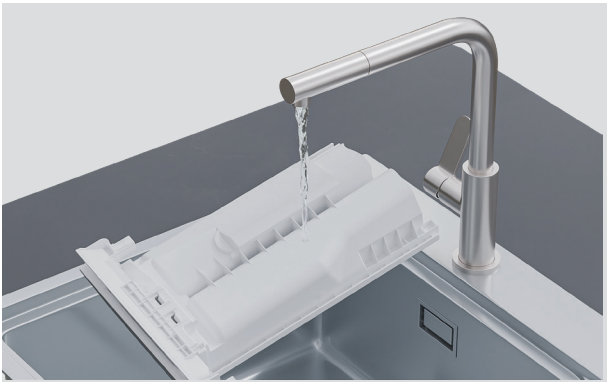

2. Empty any remaining detergent by turning the drawer upside down over the sink.



3. Rinse with warm water to remove residue, shake to clear compartments, then dry and refit the drawer.

UNLOCKING THE DOOR

Use the door release tab to unlock the machine door during a power failure. The door release tab is located behind the pump filter cover.



1. Press the filter cover to release it.



2. Pull the tab down to open.

When power is restored, the wash/dry cycle will resume. If the cycle doesn't resume automatically, press **START/PAUSE**.

CLEAN THE PUMP FILTER

Check and clean the pump filter if you notice the washer is not draining. Disconnect washer from the power supply before you remove any parts.

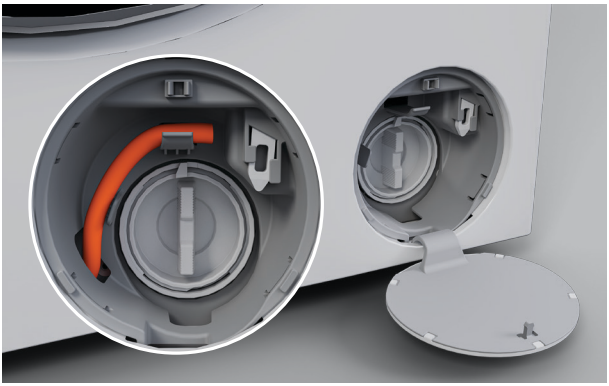

1. Push the centre of the filter cover to open, then unhook the hose and pull it out.

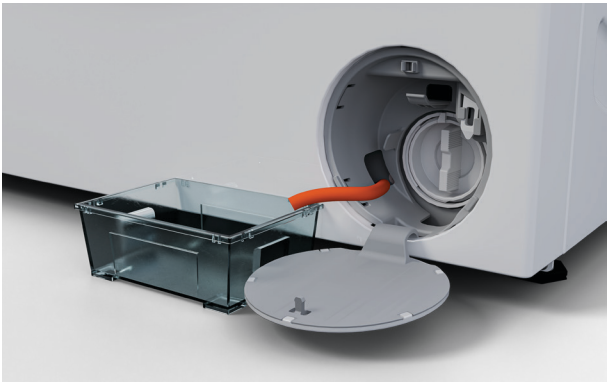

2. Remove the hose plug, and drain water into a shallow dish.

After draining, replace the plug and refit the hose in the housing.



3. Turn the filter anti-clockwise to remove. Some water may leak from it.

Clean and rinse the filter.

CLEAN THE PUMP FILTER

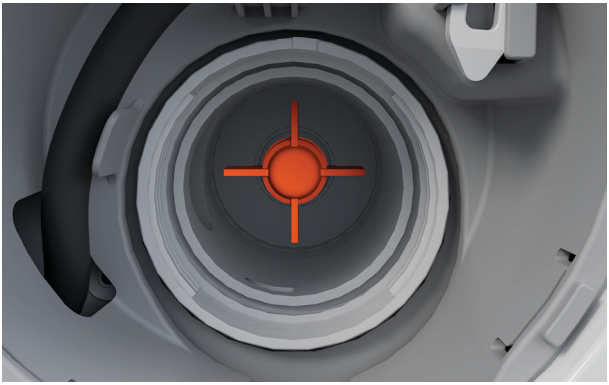

4. Check and clear the cavity behind the filter, and check that the impeller behind the filter moves freely.

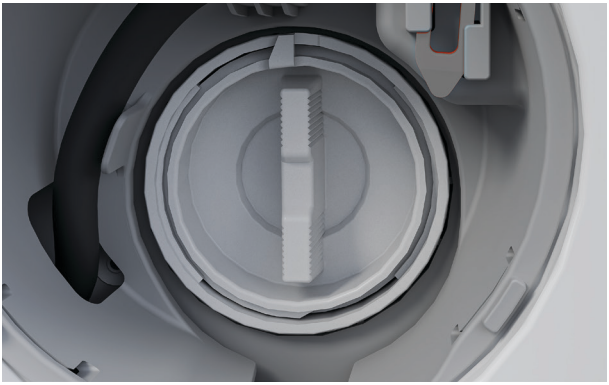

5. Refit the filter and turn it clockwise until the handle is in the vertical position.

TROUBLESHOOTING

The following is a list of problems you may encounter when using this appliance and some suggestions that may help to correct the problem. If you still have problems, please contact your Fisher & Paykel trained and supported service technician.

General

PROBLEM	POSSIBLE CAUSES	WHAT TO DO
WASHER DRYER NOT TURNING ON	Electrical cord not plugged into a power socket.	Plug cord into a power socket.
	Power not switched on at the wall.	Switch the power on at the wall. Then touch **POWER**.
	Household power supply not working.	Try plugging another electrical appliance into the same socket. Turn off the power at the power point. Unplug the washer dryer from the power socket. Wait 60 seconds, plug it back in, turn it on and try again.
	Power button not pressed properly.	Press and hold power button firmly until you hear a beep.
PRESSING START DOES NOT START FILLING OR DRYING	Washer dryer door not closed properly.	Open and reclose door.
	Cold tap turned off.	Check that the cold tap is turned on.
	Blocked hose filter.	Check the tap end of the inlet hose for blockages.
	Inlet hose leaking, twisted or damaged.	Check the inlet hose for leaks or damage. Check that the inlet hose is not twisted.
	Faulty water supply.	Check the cold tap is connected to the machine and is working.
	DELAY START may be set.	Refer to page 'Settings'.
PRESSING START DOES NOT START THE CYCLE	Only the confirm button was pushed.	Press the confirm button and then start button.
WASHER DRYER IS PAUSED	**START/PAUSE** is flashing.	Press **START/PAUSE** to resume the cycle.

TROUBLESHOOTING

General

PROBLEM	POSSIBLE CAUSES	WHAT TO DO
WASHER DRYER STOPS WORKING MID CYCLE	The washer dryer has detected a fault.	Refer to 'Fault Codes'.
	Power or water failure.	Check the power and/or water is working correctly.
	Washer dryer has been paused.	Touch **START/PAUSE** to continue.
	Too many suds.	Washer dryer is waiting for suds to dissolve before continuing the cycle.
VIBRATING	Transit bolts left in place.	Ensure transit bolts are removed prior to use of the product.
	Washer dryer may not be level.	Ensure washer dryer is installed on an appropriate surface and levelled correctly. Refer to installation guide.
	Load is out of balance.	Wash or dry an average sized load rather than a smaller load or a single item. Washing or drying one item at a time is not recommended as it is difficult for the washer dryer to balance a single item during spin.
WATER DRIPS FROM DOOR WHEN OPENED	Some residual water from the dispenser drips down into the gasket.	Water from the dispenser may drip down into the gasket when the door is first opened. This is normal. You may want to wait a few seconds before retrieving clothes.
SMALL PUDDLE OF WATER FROM UNDER THE MACHINE	Inlet hose or drain hose leaking.	Check inlet hose and the drain hose are correctly attached and not damaged.
	Lots of suds.	Suds may have leaked and then dissolved.
	Detergent dispenser blocked.	Clean detergent dispenser drawer. Refer to 'Cleaning the Dispenser Drawer'
	Detergent dispenser drawer not fully closed.	Close detergent dispenser drawer fully and ensure it remains closed during the cycle.
	Damage to door seal.	Check seal inside door for damage. If it sustains any damage it will need to be replaced.

TROUBLESHOOTING

General

PROBLEM	POSSIBLE CAUSES	WHAT TO DO
NOT SPINNING PROPERLY	Load has gone out of balance.	Open door and redistribute load, then restart the washer dryer.
	Machine is not level.	Ensure machine is correctly levelled.
	Suds build up.	Check the amount of detergent used, reduce if necessary.
DETERGENT OR FABRIC SOFTENER REMAINING IN DETERGENT DISPENSER AT THE END OF THE CYCLE	Detergent drawer not properly closed or was opened part way through the cycle.	Ensure the detergent dispenser drawer is fully closed at the start of the cycle and remains closed throughout the cycle.
	Dirty or blocked detergent dispenser.	Clean the detergent dispenser.
	Liquid sitting at the 'MAX' level at the end of the cycle indicates a blockage.	Clean the fabric softener dispenser
	Dispenser over loaded with detergent.	Clean out remaining detergent. Refer to 'Detergent and Softener' for more information.
	Flap not set in right position.	Rotate flap up if using powder detergent.
BLACK OR GREY MARKS ON CLOTHES	Correct amount of detergent.	Ensure the correct dose of detergent is used for the load size and soil level. Refer to 'Detergent and Softener' for more information.
	Washer dryer needs to be cleaned.	Empty the machine and complete a **DRUM CLEAN** cycle.
TANGLING	Items not sorted correctly.	Separate larger items from smaller items.
	Washer dryer loaded incorrectly.	Load items loosely and individually into the washer dryer (i.e not folded).
	Washer dryer overloaded in terms of its capacity or the cycle selected.	Try washing average to smaller load sizes.
UNPLEASANT SMELL COMING FROM WASHER DRYER	Washer dryer drum needs to be cleaned.	Empty the machine and complete a **DRUM CLEAN** cycle.
	Washer dryer door seal needs to be cleaned.	Clean the door seal to ensure no build-up.

TROUBLESHOOTING

Washer

PROBLEM	POSSIBLE CAUSES	WHAT TO DO
WASHER DRYER DRAINS WHILE FILLING	Drain hose too low.	Ensure the height of the drain hose is at least 600mm from the floor level.
	Drain hose sitting in water.	Clear the drain.
WASHER DRYER IS NOT DRAINING	Drain hose blocked.	Clear the drain hose.
	Pump filter blocked.	Clear the pump filter. Refer to 'Cleaning The Pump Filter'.
	Drain hose higher than 1000mm above floor level.	Lower the level of the drain hose.
FILLING	Drain hose not connected to standpipe or tub.	Connect drain hose correctly.
	Machine siphoning.	Ensure standpipe or tub is at least 800mm from the floor level.
POOR RINSING	Incorrect detergent used.	Use low sudsing, front loader detergent only. Refer to 'Detergent and Softener'.
	Too much detergent used.	Ensure the correct dose of detergent is used for the load size and soil level.
CYCLE TIME LONGER THAN USUAL/ INACCURATE TIME READING/ ADJUSTMENT OF TIME REMAINING DURING CYCLE	The wash and drying time is approximate.	Wash and drying time may be influenced by a number of factors.
	Low water pressure or flow rate.	Ensure that the inlet hose filter is not blocked.
	Out of balance or oversudsing.	Recovery from out of balance or oversudsing will extend cycle time.
	Washing a large load.	Be aware that it will take longer for the machine to fill.
	Selecting various options.	Be aware that some options will extend cycle time.
DYE TRANSFER	Coloured items not washed separately from white/light coloured items.	Remember to separate whites and colours.
	New or non-colourfast items not washed separately.	Wash non-colourfast items separately and select **COLD** wash temperature.
	Wet items have been left sitting for too long.	Remove items from washer dryer as soon as the cycle is finished.
	Wash temperature.	Consider the wash temperature you select for your coloured items. Lower the temperature if you are concerned.

TROUBLESHOOTING

Washer

PROBLEM	POSSIBLE CAUSES	WHAT TO DO
TOO MANY SOAP SUDS	Incorrect type of detergent used.	Use low sudsing, front loader detergent only. Refer to 'Detergent and Softener'.
	Too much detergent used.	Ensure the correct dose of detergent is used for the load size and soil level. Refer to 'Detergent and Softener'.
POOR SOIL REMOVAL	Incorrect wash cycle selected.	Select a wash cycle that is appropriate for the amount of dirt. Refer to pages 'Cycles'
	Insufficient detergent.	Ensure the correct dose of detergent is used for the load size and soil level. Refer to 'Detergent and Softener'.
	Washer dryer overloaded.	Ensure the washer dryer is not overloaded in terms of its capacity or the cycle selected. Refer to pages 'Cycles'.
	Load was particularly dirty.	Select **SOAK** for particularly dirty loads.
	Items not sorted correctly.	Wash heavily and lightly soiled garments separately.
	Washer dryer dirty from previous wash or dry cycle.	After washing particularly dirty clothing, we recommend putting the washer dryer through a **RINSE** cycle after the load has been removed, to wash away any remnants of dirt and to prevent it contaminating future wash or dry cycles.
	Incorrect wash temperature selected in relation to the type of soil.	Select a wash temperature suitable for the type of soil, e.g warm for greasy soils, cold for muddy soils. Increasing the wash temperature generally improves soil removal and overall wash performance.
WASHING VERY WET AT THE END OF THE CYCLE	Cycle selected not appropriate.	Particularly short or delicate cycles have shorter spins which can result in wetter washing at the end of the cycle.
	Incorrect spin speed for load selected.	Select a faster spin speed.
	An out of balance load has occurred.	The washer dryer compensates for the out of balance by using a lower spin speed, to reduce noise and potential damage to itself.

TROUBLESHOOTING

Dryer

PROBLEM	POSSIBLE CAUSES	WHAT TO DO
DRYER IS TAKING TOO LONG/ RESULTS WERE NOT SATISFACTORY	Drying cycle selected not appropriate for the load.	Select an appropriate cycle for the load.
	Dryer overloaded for the cycle.	Each cycle has a maximum load size. Refer to 'Cycles'..
		Try dividing the load in two and dry half at a time.
	Environmental conditions may be affecting dryer operation.	In hot, humid conditions the dryer will take longer to dry a load and be less efficient.
	Dryer not draining water properly.	Check the drain hose for blockages or damage. You may need to call for service.
	Items got wrapped up inside other items.	Try separating items and drying similar items together. Open items out when you place them in the dryer. Do not fold them up. Untangle items, eg pull long sleeves out so they are not stuck/trapped on the inside of the garment.
	Load overly wet at the start of cycle.	Remove more water from the load before placing it in the dryer, eg select a faster spin speed on your washer, if appropriate for your load.
CLOTHES GETTING TOO HOT OR DAMAGED	Cycle selected not appropriate for the load.	Ensure the cycle selected is appropriate for items in the load. Refer to pages 16-19.
	Items removed from dryer before the end of cycle cool down had finished.	Removing items before cool down may damage clothing if it is not spread out and exposed to air to cool once removed from the dryer.

TROUBLESHOOTING

Dryer

PROBLEM	POSSIBLE CAUSES	WHAT TO DO
LINTING	Washer dryer is overloaded.	Remove some items from the washer dryer, cycles have certain capacity limitations. Refer to 'Cycles'.
	New items have been dried in the washer dryer recently.	New towels or flannelette sheets can leave lint in the dryer, which may be picked up by subsequent loads.
NOISES	Dryer is overloaded.	Remove some items from the dryer.
	Dryer has a fault.	Refer to 'Fault Codes'.
	Dryer is not level.	Ensure the dryer is level. Refer to installation guide.
CYCLE TIME LONGER THAN USUAL	Cycle time may be affected by a number of factors and is approximate.	Cycle time is affected by the size and composition of the load, how wet/dry the load was to begin with, the environmental conditions the dryer is operating in, cycle options selected, sensing while drying and any interruptions during the cycle.
SMALL ITEMS TRAPPED IN THE DOOR THAT DO NOT DRY	Items are plastered during high speed spin or get pushed between gasket and glass.	Use drying rack or garment bag for small items that may become trapped between the door glass and gasket and do not fully dry.
FABRIC DAMAGE	Metal parts on the items or in the load.	Fasten zips and other clasps before placing items in the washer dryer.
	Items not separated or dried on an appropriate cycle for the fabric type.	Dry similar items together. Ensure an appropriate cycle is selected. Refer to pages 12 and 16-19.
	Dryness level selected not appropriate for the fabric type.	Ensure the dryness level selected is appropriate for the fabric type. Refer to the items care label.
	Instructions on care label not followed.	Follow the instructions on the care label of the items.
CREASING	Washer dryer overloaded.	Do not overload washer dryer.
	Spin speed too fast.	Select lower spin speed.
	Items not sorted correctly.	Sort load so that items of similar weight are washed and dried together.

FAULT CODES

How do I know if there is a problem?
Your appliances will beep and an alert will show in the display.

What to do
First try to fix the issue and clear the alert according to the instructions on-screen or the steps in the following table.

If problem persists
1. Note down the fault code
2. Contact Customer Care or a Fisher and Paykel trained and supported service technician. Refer to the Service and Warranty booklet for contact details.

FAULT CODE	POSSIBLE CAUSE	WHAT TO DO
CLR FLTR	The washer dryer is not draining properly within the expected time.	Clean the pump filter.
		Check that the drain hose is installed correctly.
E2	The door is not closed properly.	Close the door firmly and try starting the cycle again.
E4	The washer dryer did not reach the required water level within the expected time.	Check that the water supply tap is fully open and water pressure is normal.
	The drain hose may be self-siphoning.	Check that the drain hose is installed correctly.
E8	The washer dryer has detected an abnormal water level.	Contact Customer Care
E5	The washer dryer is not draining within the expected time.	Clean the pump filter.
		Check that the drain hose is installed correctly.
F + Number	An internal fault has been detected.	Contact Customer Care
nd	A cycle has not been selected.	Select a cycle and press **START/ PAUSE** to begin.
Lock	The water level, temperature, or spin speed is too high to allow the door to open safely.	Wait until the washer dryer cools and the water has drained. The door will unlock automatically when it is safe.
Eb	Laundry is trapped in the door seal.	Open the door and reposition the laundry inside the drum.
		Close the door and press **START/ PAUSE** to restart the cycle.

MANUFACTURER'S WARRANTY AND SERVICE GUIDE

AU

To access your Warranty and Service Guide

Scan the QR code with your smartphone to access your warranty and book a service, refer to your separate warranty and service book or view online at https://www.fisherpaykel.com/au/help-and-support/warranty-information

This product has been designed for use in a domestic (residential) environment. This product is not designed for any commercial use. Any commercial use by the customer will affect this product's Manufacturer's Warranty.

Complete and keep for safe reference:

Model _____

Serial No. _____

Purchase Date _____

Purchaser _____

Dealer _____

Suburb _____

Town _____

Country _____

FISHERPAYKEL.COM

© Fisher & Paykel Appliances 2026. All rights reserved.

The models shown in this guide may not be available in all markets and are subject to change at any time.

The product specifications in this guide apply to the specific products and models described at the date of issue. Under our policy of continuous product improvement, these specifications may change at any time.

For current details about model and specification availability in your country, please go to our website or contact your local Fisher & Paykel dealer.