DISHDRAWER™ DISHWASHER
INSTALLATION GUIDE

Components required	3
Accessing your product specifications	4
Prior to installation	7
Prepare dishwasher	14
Install dishwasher	19
Prepare custom panel	20
Complete dishwasher installation	27
Check panel face alignment	30
Install services	35
Installer checklist	42

FISHER & PAYKEL

EU

434527A 10.26

INTEGRATED DISHDRAWER™ DISHWASHER

DD60STX6HI1

COMPONENTS REQUIRED

TOOLS

Not supplied

- ☐ Box cutter
- ☐ Crosshead screwdriver
- ☐ Flat blade screwdriver
- ☐ Drill
- ☐ 1x 13mm Drill bit
- ☐ 1x 2.5mm Drill bit
- ☐ Level
- ☐ Pliers
- ☐ Pencil
- ☐ 57mm Hole saw drill bit (refer to page 11)

PARTS

Supplied and required

- ☐ 4x Side mounting brackets
- ☐ 1x Sealing tape
- ☐ 1x Drawer bracket kit
- ☐ 16x 16mm Crosshead screws
- ☐ 2x 38mm chassis feet fixing screws and washers

Supplied

- ☐ 4x Spacer sets
- ☐ 1x Drain hose support
- ☐ 1x Drain hose joiner
- ☐ 1x Wire clip
- ☐ 1x Clamp
- ☐ 1x External venting kit
- ☐ 10x Screw caps

To access installation videos, scan the QR code or go to: https://www.fisherpaykel.com/nz/dishdrawer-installation-videos

The videos provide an overview of the DishDrawer™ installation and are not intended to be used as a standalone guide.

Installation should be undertaken by a Fisher & Paykel trained and supported service technician or qualified person.

ACCESSING YOUR PRODUCT SPECIFICATIONS

For full product, cabinetry and service specifications, refer to the Planning Guide. To access the Planning Guide, scan the QR code or visit fisherpaykel.com/specify. Search by appliance type, product name or model code.

For installation support please contact the Fisher & Paykel design support team at designsupport@fisherpaykel.com

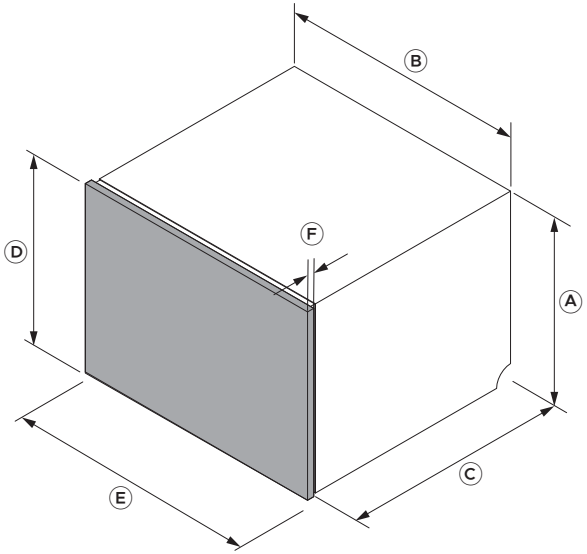

Dimensions	DD60STX6HI1
	mm
Ⓐ Chassis height	455
Ⓑ Chassis width	599
Ⓒ Chassis depth*	553
Ⓓ Panel minimum height	452
Ⓔ Panel minimum width	596
Ⓕ Panel thickness**	16-25
Maximum bottom panel extension	50

*Excludes panel. **Guide assumes 18mm door panels, where the panel is less than 18mm thick at any fixing point, use shorter screws (not supplied) to avoid breaking through the face of the panel. Note: A 2mm clearance gap is required between the dishwasher drawer panel and surrounding cabinet panels.

Ensure there is a small gap between the custom panel and any cabinetry behind it to maintain a proper seal in the dishwasher. This prevents moisture escape and condensation, which can damage the custom panel.

The cavity, custom panel and under countertop base materials and surfaces must be moisture resistant. If they are not, seal or paint them with a moisture resistant coating system.

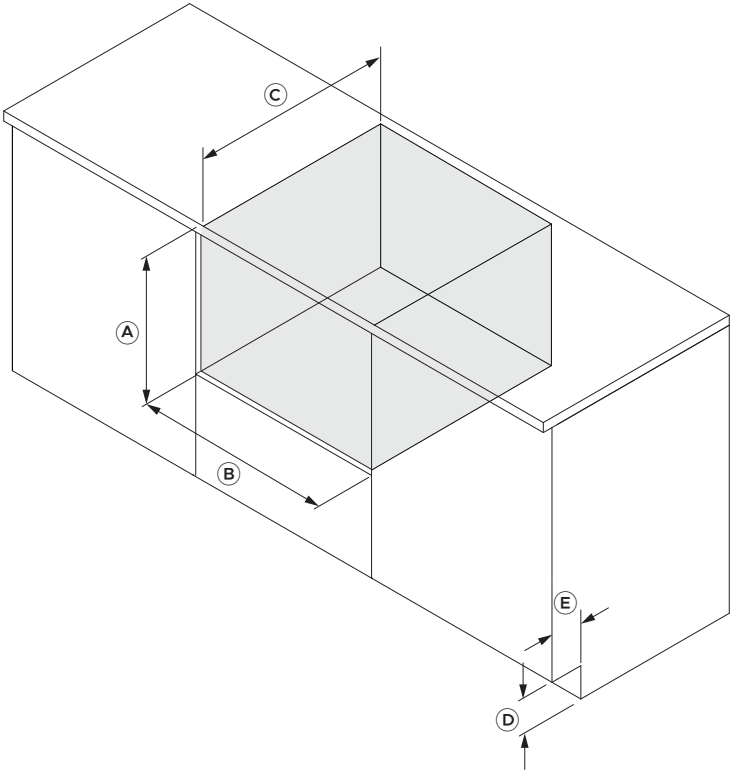

Dimensions	DD60STX6HI1
	mm
Ⓐ Cavity minimum height	457
Ⓑ Cavity width	600 - 610
Ⓒ Cavity minimum depth*	580
Ⓓ Minimum cabinet toe kick height**	100
Ⓔ Minimum cabinet toe kick depth**	60

*Guide assumes 18mm door panels **When venting through toe kick

CUSTOM PANEL ADJUSTMENT OPTIONS

Once installed, custom panels may require small adjustments to align with existing cabinet fronts. Three adjustments are available: side to side, up and down, and tilt. A crosshead screwdriver will be required.

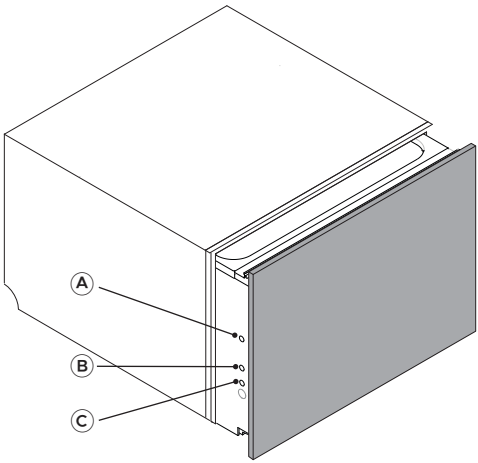

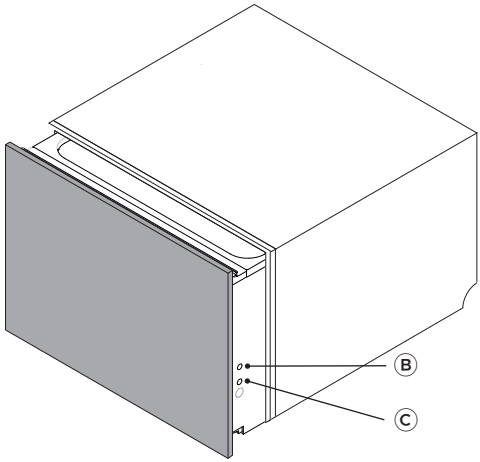

Adjustments
Ⓐ Adjust side to side (horizontal)
Ⓑ Adjust up and down (vertical)
Ⓒ Adjust panel tilt

fisherpaykel.com/specify

1. Refer to the Planning Guide for cabinetry, cavity and service specifications.



2. The cavity and under countertop base materials and surfaces must be moisture resistant.

If they are not, seal or paint them with a moisture resistant coating system.



3. Check that the cavity is clean and in good order.

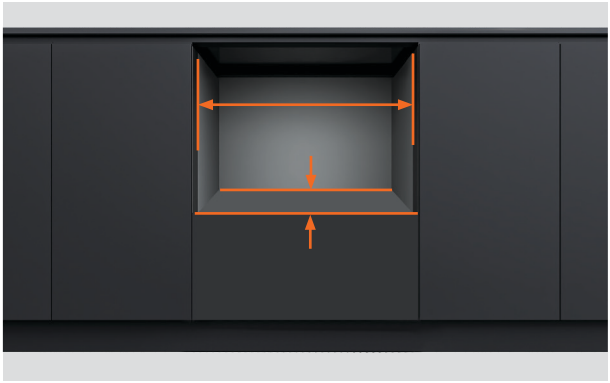

4. Ensure the cabinet meets the minimum cavity specifications required.

Check that the cabinet sides are square.

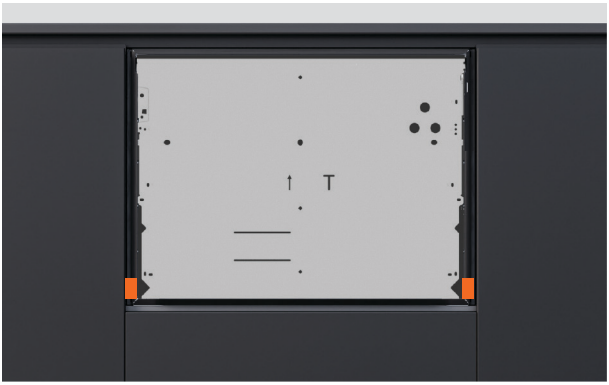

5. If the cavity is too wide, add material to the sides to allow the dishwasher to be secured.

See the planning guide for details.

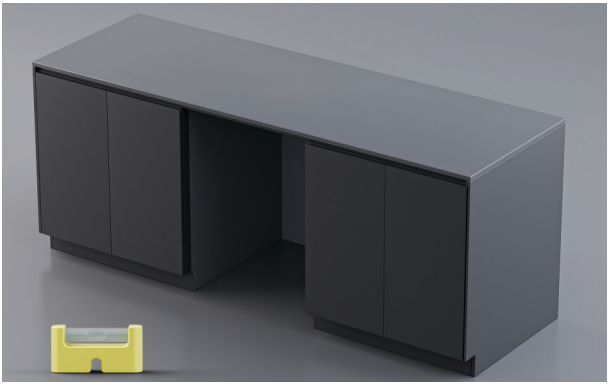

6. Check that the cabinet is level.



7. The power plug should be accessible after installation for maintenance.



8. Service holes can be routed from the dishwasher into the adjacent cavity.

If routed through the cabinet toe kick, vent ducts require a minimum toe kick height of 100mm and depth of 60mm.

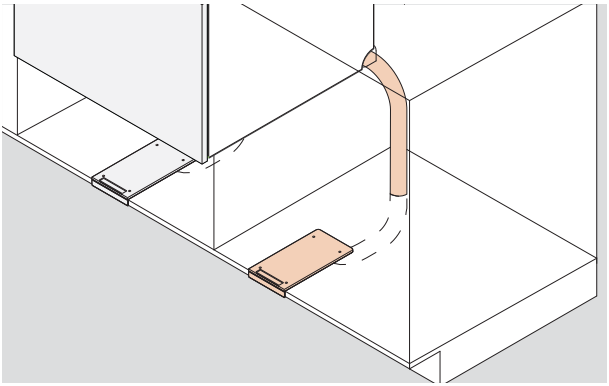

1. The vent hose can be routed through to the adjacent cabinet and into the toe kick.

Alternatively, it can be routed under the dishwasher into the toe kick.

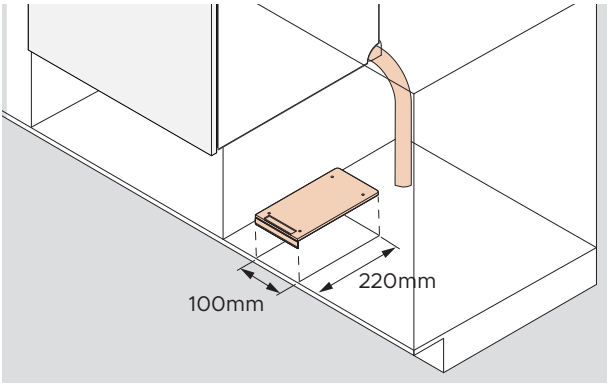

2. The vent duct cut out is 100mm x 220mm.

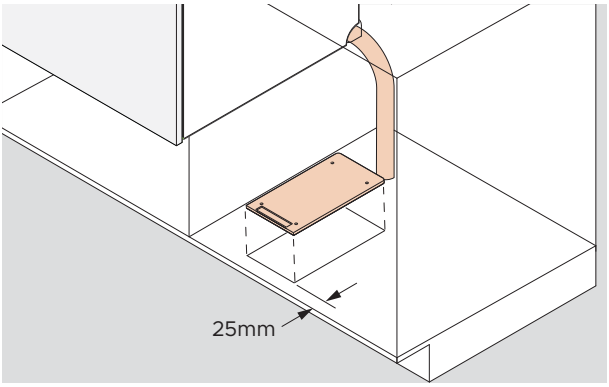

3. Framed cabinetry:

The cut out should be placed 25mm back from the frame.

Refer to the Planning Guide at fisherpaykel.com for service options.

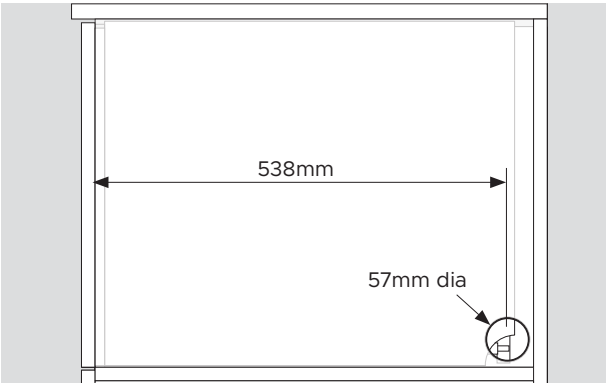

1. A minimum 57mm diameter service hole is required in the cabinet side.

The center of the hole should be a minimum of 538mm from the front of the chassis.

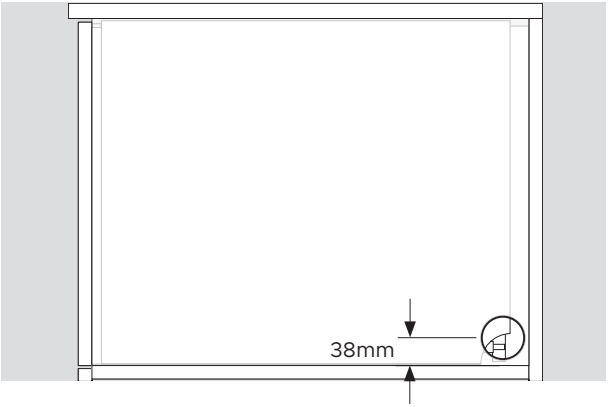

2. The center of the hole should be a maximum of 38mm from the shelf.

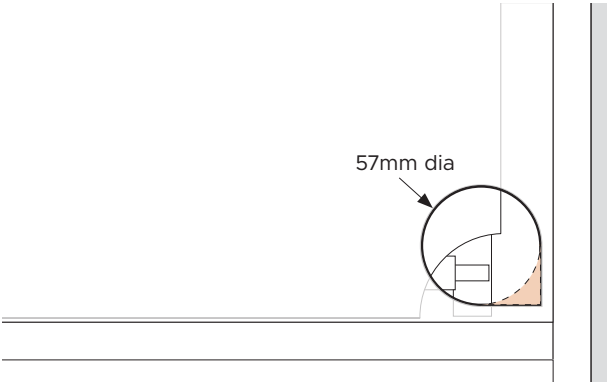

3. If the vent hose is routed through the service hole, cut out the back corner.

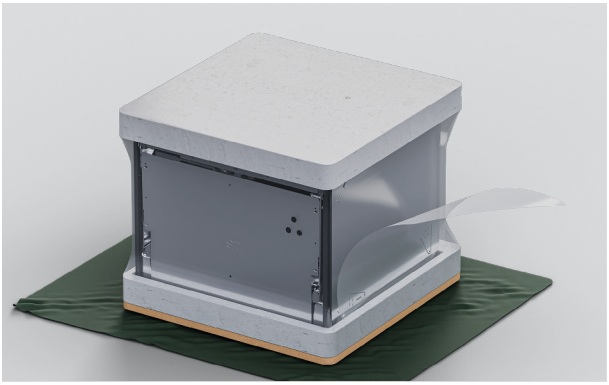

1. Remove the plastic wrap.

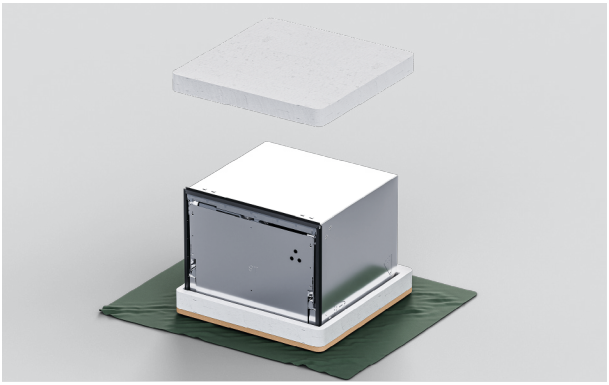

2. Remove the top packaging.

Leave the base on to protect the floor surface while moving the dishwasher.



3. Do not remove drawer bracket from the front of the dishwasher.

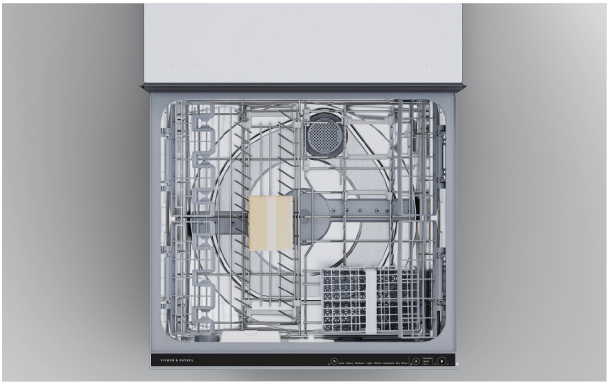

4. Peel the tape from the drawer and remove accessories and installation packages from the tub.

Close the drawer and re-apply the tape.



5. Dispose of packaging responsibly.

APPLY SEALING TAPE



1. Ensure underside of countertop is clean and free of dust.

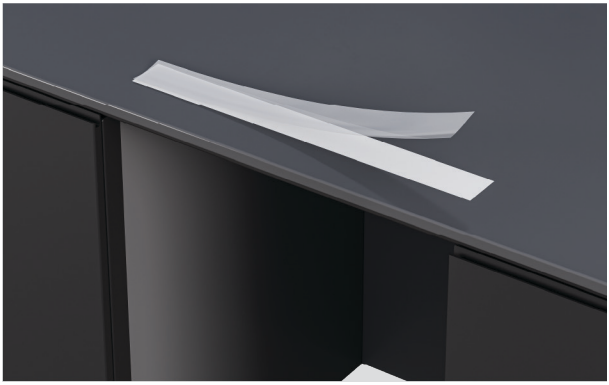

2. Remove backing from tape.



3. Apply tape centrally along the underside of the countertop or cavity edge.

The sealing tape must be free of creases, folds, or air bubbles.

DISHWASHER SECURING OPTIONS

The dishwasher must be secured to stay in place and prevent vibration. Three fixing points on each side of the chassis are recommended.

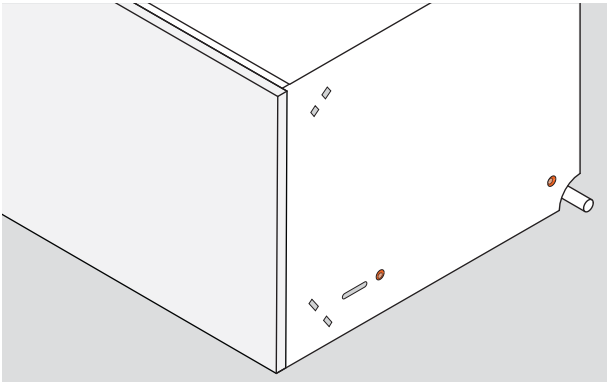

1. Securing through chassis sides:

Screws must be fixed through the chassis sides and into the cabinet sides or packers.

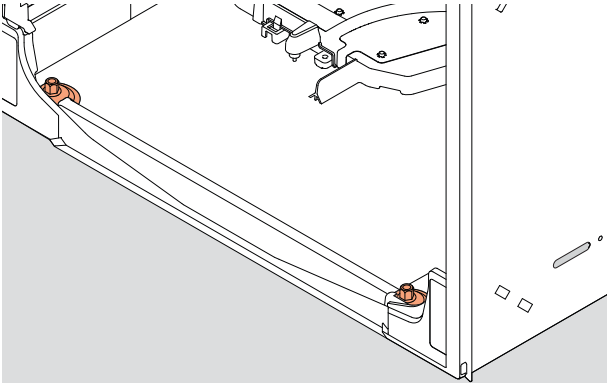

2. Securing through chassis bottom:

Screws can be fixed through the bottom of the chassis and into the shelf from the inside of the dishwasher.

2x 38mm fixing screws and washers are supplied.

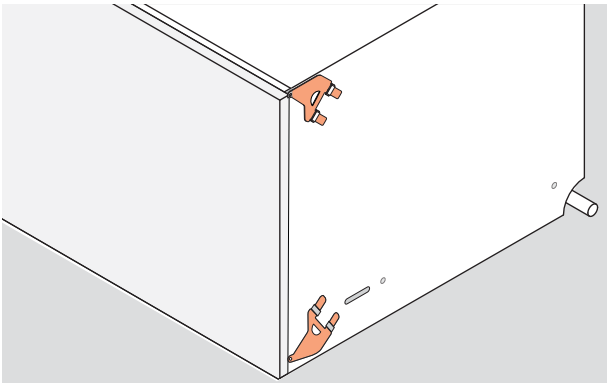

3. Securing through side brackets:

Upper or lower bracket sets can be inserted into the chassis sides and fixed to the edges of the cabinet.

Both sets can be used if needed.

ATTACH BRACKETS

The brackets must lie flat on the chassis with the locking tabs facing out. The locking tabs must be properly inserted through the slots to secure the brackets.

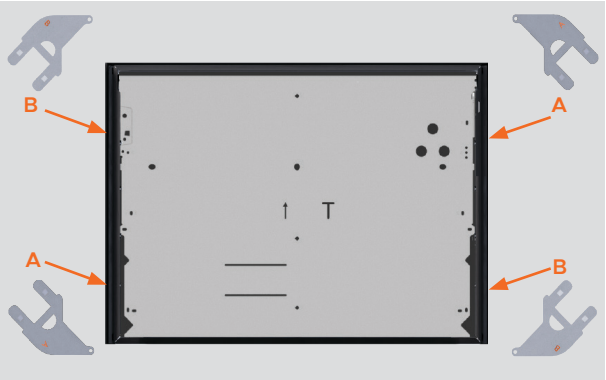

1. Locate the upper and lower bracket sets.

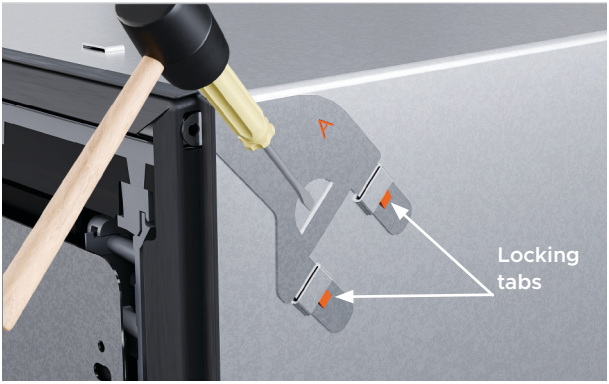

2. If using the upper bracket set, insert into the slots and tap gently with a soft mallet to secure.

Push the screw tab through the gap in the rubber seal.



3. If using the lower bracket set, insert into lower slots and tap gently with a soft mallet to secure.

Push the screw tab through the gap in the rubber seal.

ATTACH SPACERS



1. Snap off the four spacers with an adhesive strip.

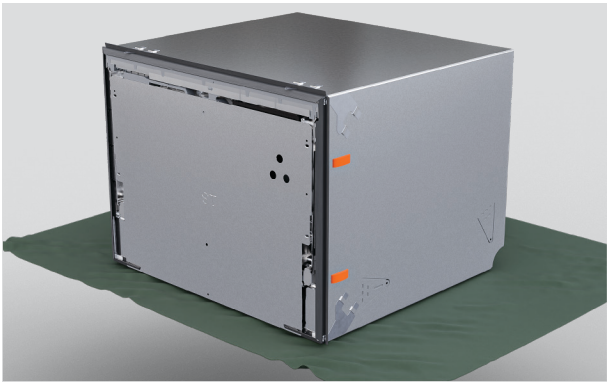

2. Place spacers on each side of the dishwasher between the brackets.

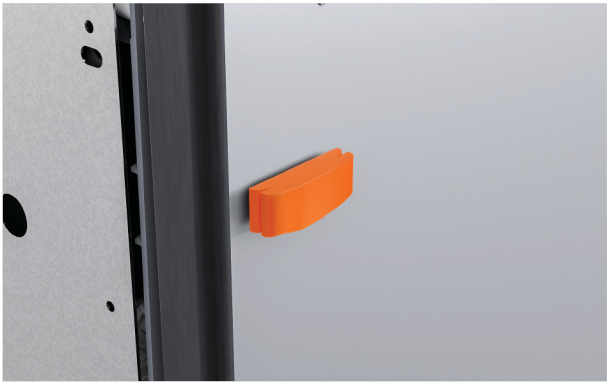

3. If required, a larger spacer segment can be snapped on to adjust the thickness.

ATTACH VENT HOSE

Refer to the planning guide at fisherpaykel.com for venting options.

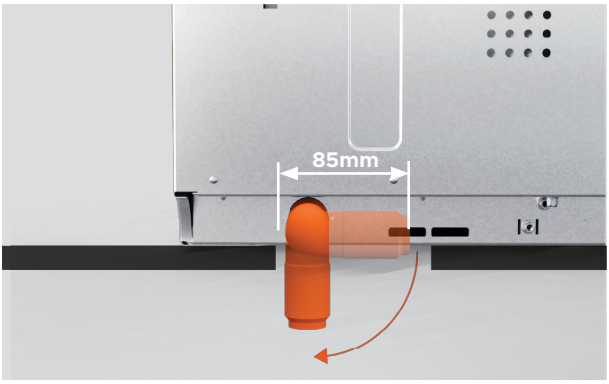

The vent can be routed under the dishwasher.

Ensure the cut out size allows the vent elbow to be rotated when the dishwasher is in the cavity.



1. Rotate the elbow to the left or right depending on your venting location.

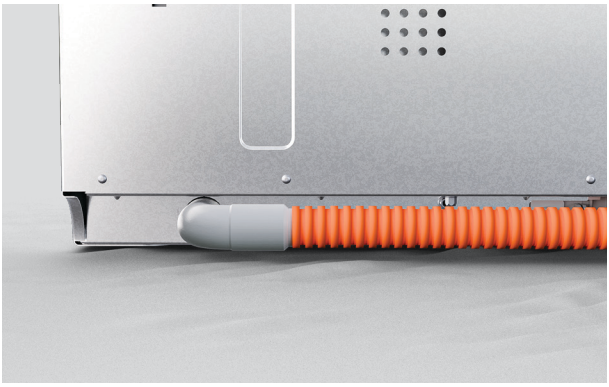

2. If the vent is routed left or right, push the vent hose onto the elbow firmly to secure.

PUSH INSIDE CAVITY

The minimum gap between the drawer panel and countertop or frame is 2mm.



1. Place hoses and cords through the service holes and into the adjacent cavity.



2. Carefully push the dishwasher into the cavity, feeding the hoses through the service holes as you go.

Avoid crushing or twisting the hoses.



3. Place the panel onto the drawer bracket and adjust the dishwasher within the cavity until the front of the panel aligns with the cabinet doors.

MEASURE CUSTOM PANEL

If panel widths or heights are extended over the minimum dimensions, ensure there is a small gap between the custom panel and any cabinetry behind it.

The drawer must seal fully to prevent moisture escape and condensation, which may damage the custom panel.



1. Measure the distance from the adjacent cabinet doors to the edges of the drawer bracket.

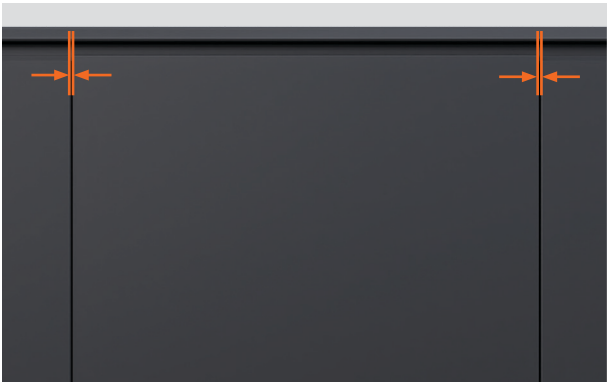

2. Subtract the required gap between the cabinet panels from each measurement.

The minimum required gap to adjacent cabinet doors or drawers is **2mm**.

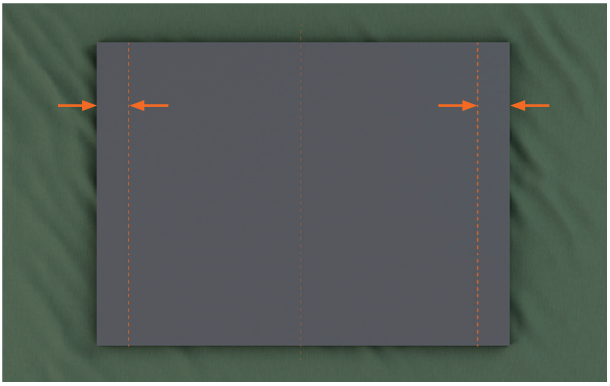

3. Use the final measurements to mark vertical lines on the back of the custom panel.

ATTACH PANEL TO DRAWER BRACKET



1. Rotate the drawer bracket pins by a quarter turn.

Use pliers to pull the side pin out.

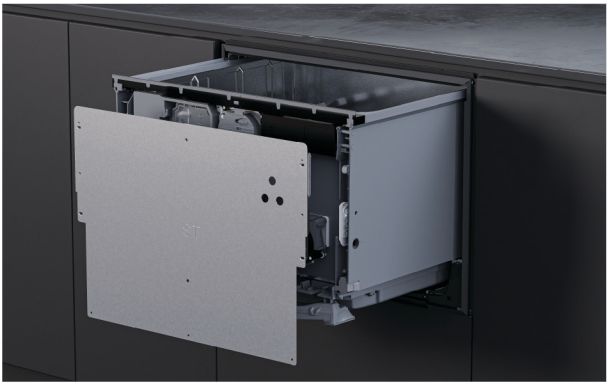

2. Detach the drawer bracket by pulling down firmly and then angling out.

Disconnect the earth wire from the bracket before removing.



3. Position the drawer bracket on the custom panel between the marked lines.

Ensure that the bottom of the drawer panel rests on the bracket.

ATTACH PANEL TO DRAWER BRACKET

Supplied screws are 16mm long. Where the panel is less than 18mm thick at any fixing point, use shorter screws (not supplied) to avoid breaking through the face of the panel.

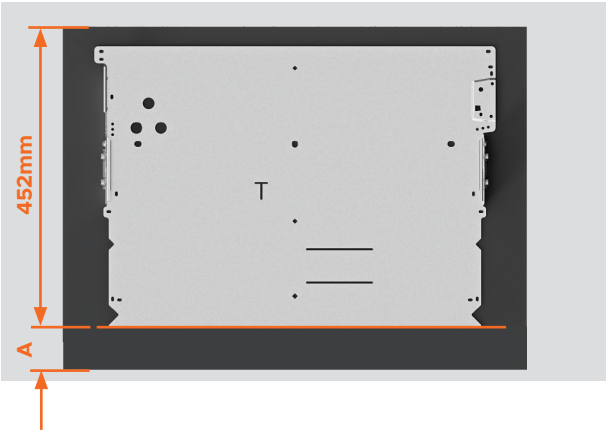

4. Panels extended at the bottom:

Use the extension measurement (A) to position the lower edge of the bracket.

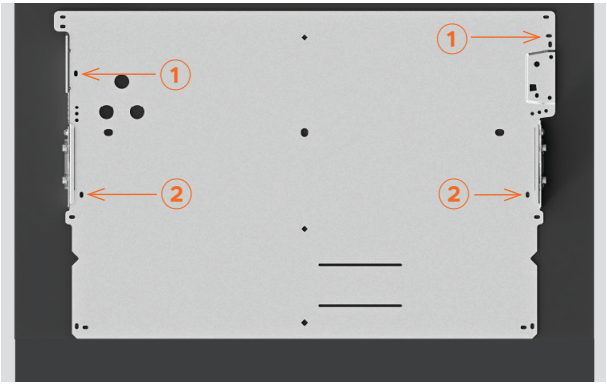

6. Fix one screw in each location slot numbers ① and ②.

Pilot holes may be required depending on the panel material.



5. Slot panel onto dishwasher.

Check gaps between the panel and adjacent cabinet doors are a minimum of 2mm.

ATTACH PANEL TO DRAWER BRACKET

Supplied screws are 16mm long. Where the panel is less than 18mm thick at any fixing point, use shorter screws (not supplied) to avoid breaking through the face of the panel.

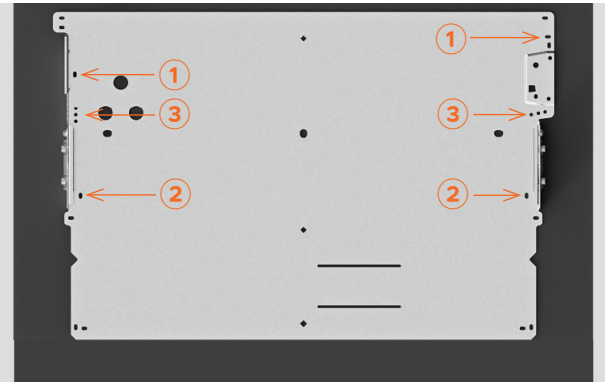

7. Tighten the screws in positions ① and ②.

Add one screw on each side in one of the three holes marked ③.

At least three screws are required on each side of the drawer bracket.

INSTALL KNOCK-TO-PAUSE MODULE

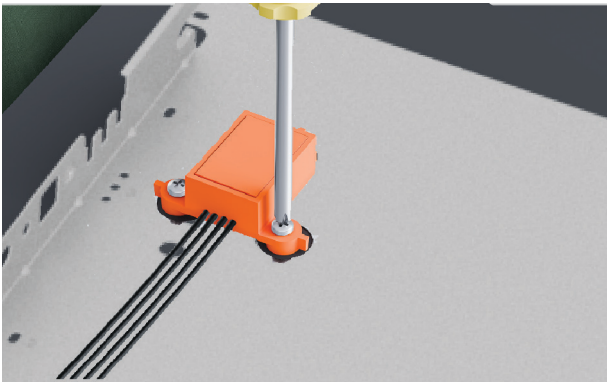

1. Secure knock-to-pause module to the panel using the supplied screws.



2. Check that the module is oriented correctly and fixed securely to ensure proper function.



3. Move the panel to the dishwasher.

Plug the knock-to-pause module into the controller.

SECURE PANEL



1. ⚠ Attach the earth wire to the drawer bracket to ensure safe use.



2. Place the panel back onto the dishwasher. Insert the side pins.

Quarter turn the pins to secure.

ADJUST PANEL TILT

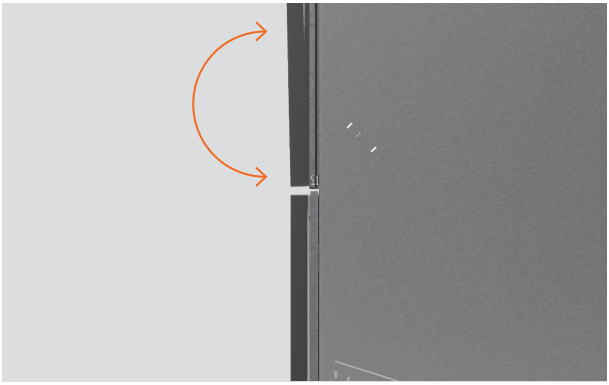

The custom panel may require small adjustments to align with existing cabinet fronts.



1. Adjust panel tilt

Insert a crosshead screwdriver into the lower hole above the side pin and turn to adjust.

Repeat on the other side of the drawer if required.

SECURE THROUGH CHASSIS SLOT

Slots in the chassis sides allow screws to be temporarily fixed and the dishwasher to be adjusted within the cavity. Panel alignment can then be checked before final fixing.

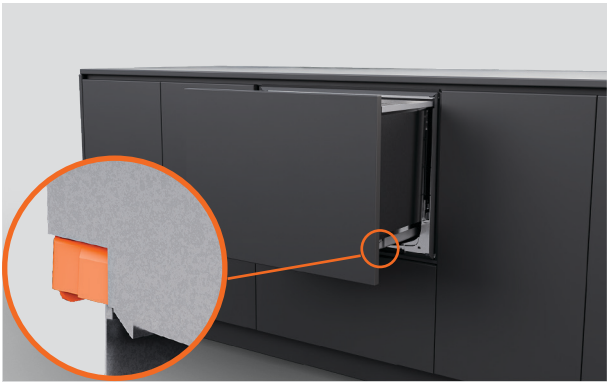

1. Pull the drawer halfway out to remove the tub.

On each side of the tub, push locking tabs back.



2. Place the drawer on a protected surface to the left of the appliance.

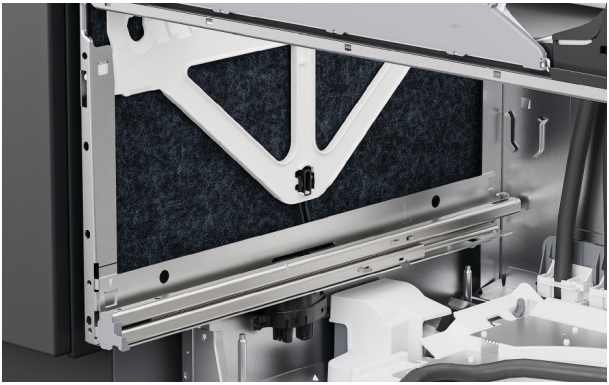

3. On the chassis sides, lift the insulation.

SECURE THROUGH CHASSIS SLOT



4. Fit a screw in each chassis slot to secure to the cabinet.

Partially tighten screws ensuring adjustments can be made.

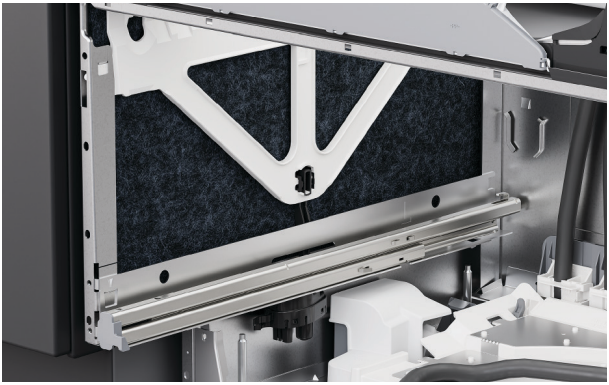

5. Refit insulation ensuring it is positioned correctly and will not obstruct the drawer runners.



6. To replace the tub, pull the drawer runners halfway out.

Place the tub onto the runners.

SECURE THROUGH CHASSIS SLOT

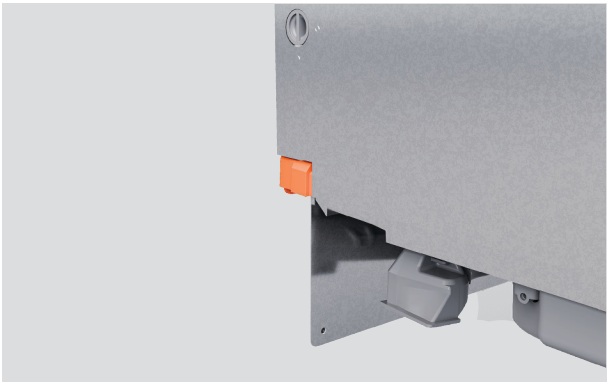

7. Pull locking tabs forward and click the drawer into place.

Ensure hoses are not crushed or twisted when closing the drawer.



8. Check that the panel is aligned with the surrounding cabinetry.

Adjust the dishwasher in the cavity if required.

ADJUST PANEL ALIGNMENT VERTICAL AND HORIZONTAL



Adjust up and down (vertical)

Insert a screwdriver into the second hole above the bracket pin and turn to adjust.

Repeat on the other side of the drawer if required.



Adjust side to side (horizontal)

On the left-hand side of the drawer, insert a screwdriver into the third hole above the side pin and turn to adjust.

Turn clockwise to move panel to the right and anti-clockwise to move panel to the left.

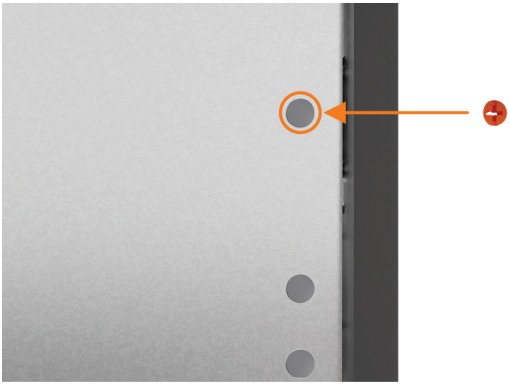

When all adjustments are final and the dishwasher is installed, locate the screw caps and insert into the adjustment holes.

SECURE THROUGH CHASSIS

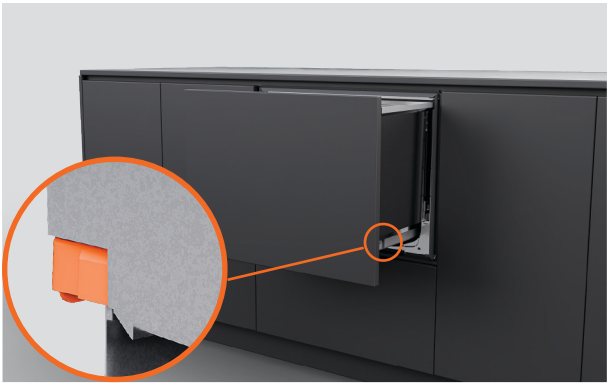

1. Pull the drawer halfway out to remove the tub.

On each side of the tub, push locking tabs back.

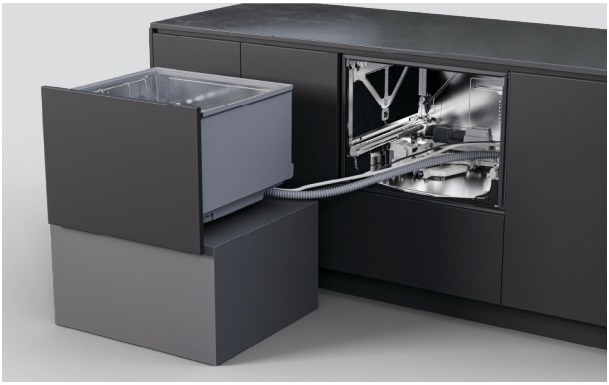

2. Place the drawer on a protected surface to the left of the appliance.

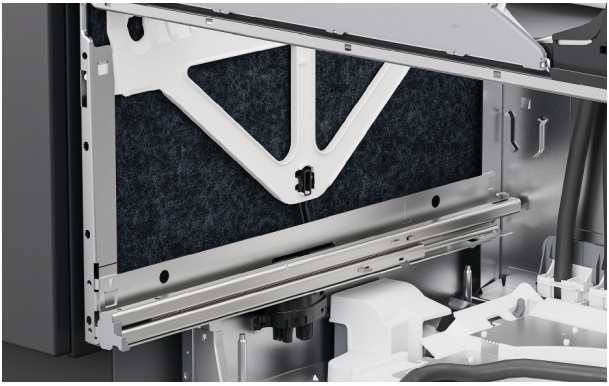

3. On the chassis sides, lift the insulation.

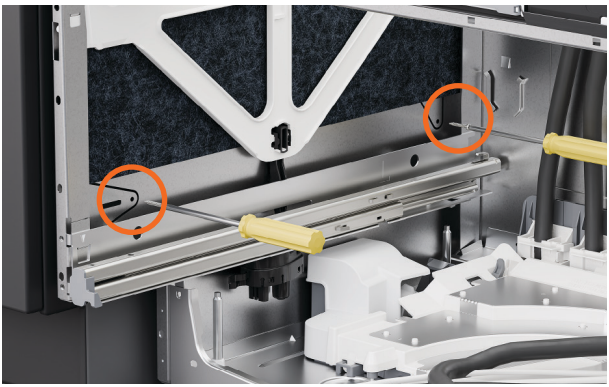

4. Insert screws through the two holes on each side of the chassis.

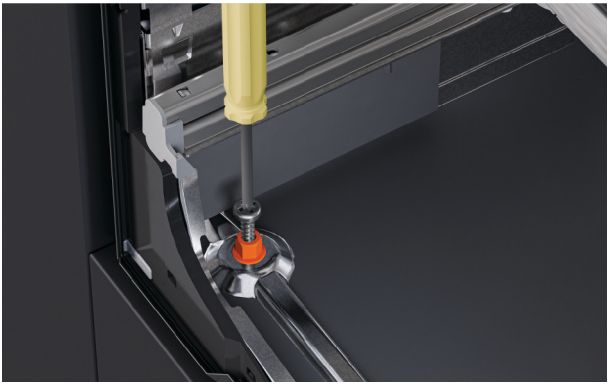

5. Insert the supplied 38mm screws and washers through the front two holes on the bottom of the chassis.

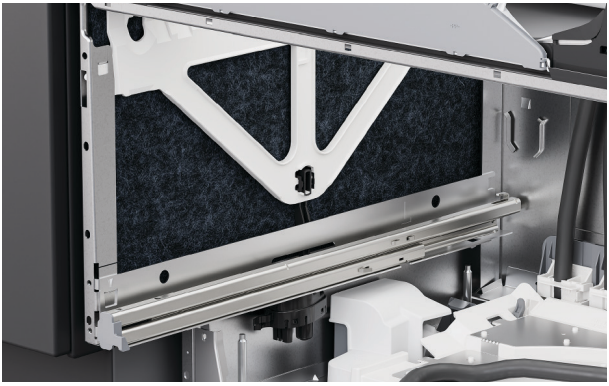

6. Ensure insulation is repositioned correctly and will not obstruct the drawer runners.

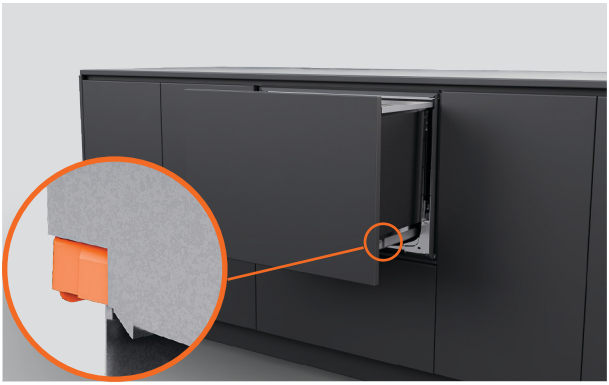

7. Place the tub back onto the runners, pull locking tabs forward and click drawer into place.

SECURE USING BRACKETS



1. If using brackets, partially open the drawer.

Lift the rubber seal and remove the left and right screw covers from the trim.



2. Fix side brackets using the supplied screws and replace the screw caps.

INSTALL VENT

The vent hose should not exceed a maximum length of 1.6 meters. Do not shorten the hose.

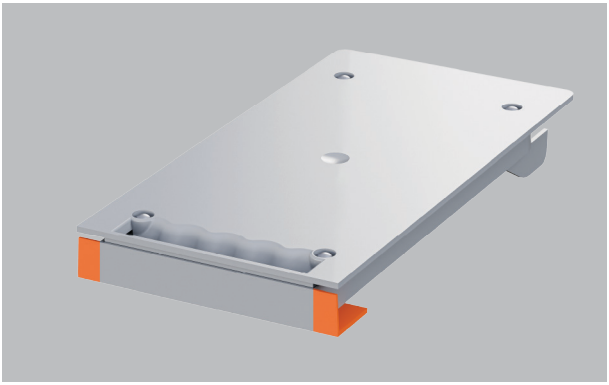

If the cabinet is framed or cannot be installed on the shelf edge, cut off the edging on the vent duct.

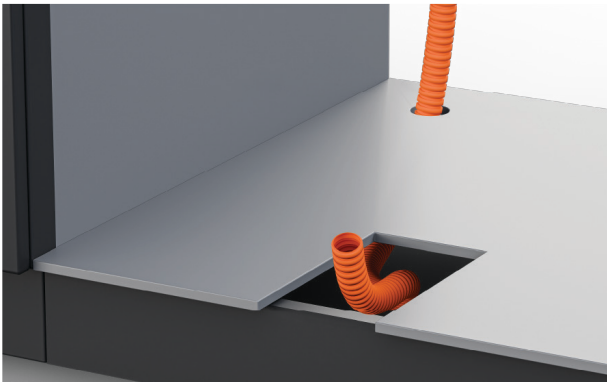

1. Feed the vent hose into the toe kick space in the adjacent cabinet or under the dishwasher as required.

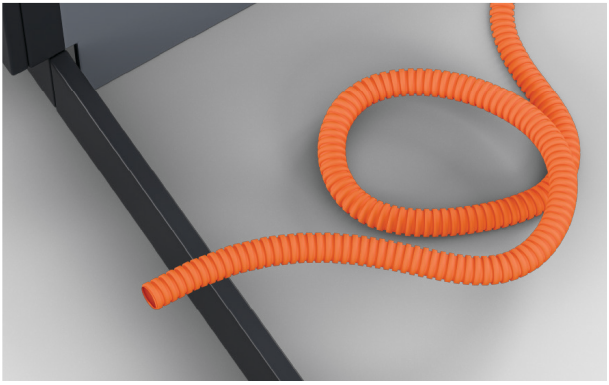

2. The vent hose can be coiled in the toe kick space.

Ensure that there are no sharp bends or kinks.

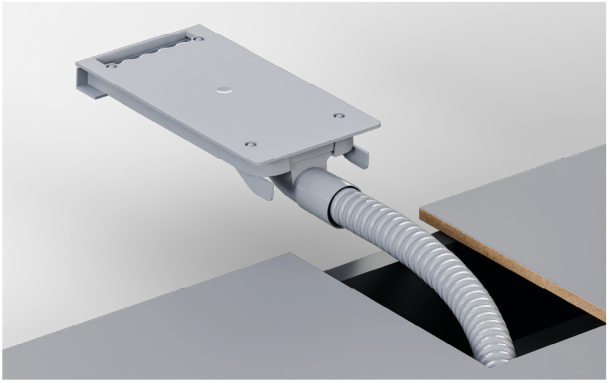

3. Pull the end of the venting hose through the cut out and firmly attach it to the vent duct.

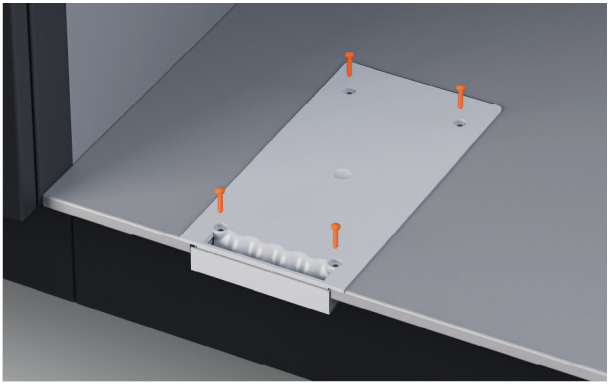

4. Secure the vent using the provided screws.

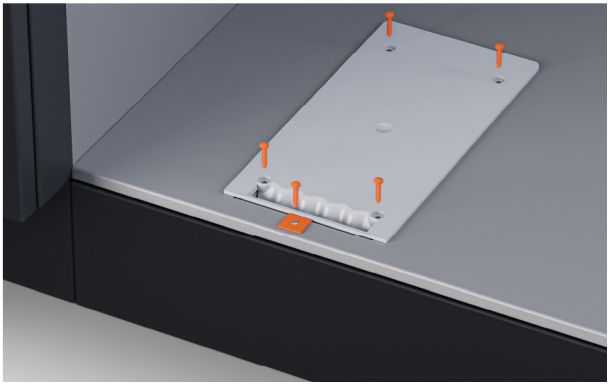

5. For framed cabinetry, install the bracket and screw included in the venting kit.

DRAIN CONNECTION OPTIONS

Water pressure DD60STX6HI1: Maximum 1 MPa (145 psi), min. 0.1 MPa (14.5 psi)
Water connection: 3/4" BSP (GB20) to suit flat washer, recommended temperature: cold 20°C

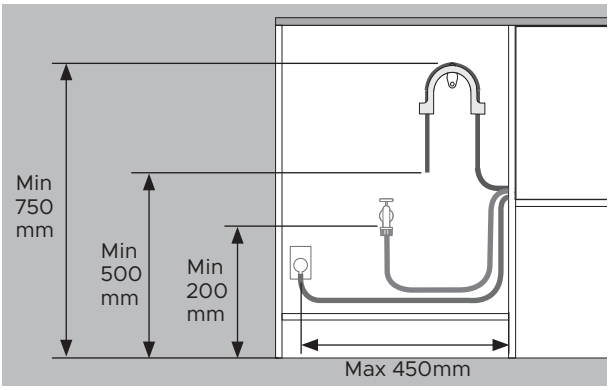

Distances are the same for all installs.

- Floor to support top - min 750mm.
- Floor to drain hose end - min 500mm.
- Floor to water inlet - min 200mm.
- Cabinet side to center of electrical outlet - maximum 450mm.

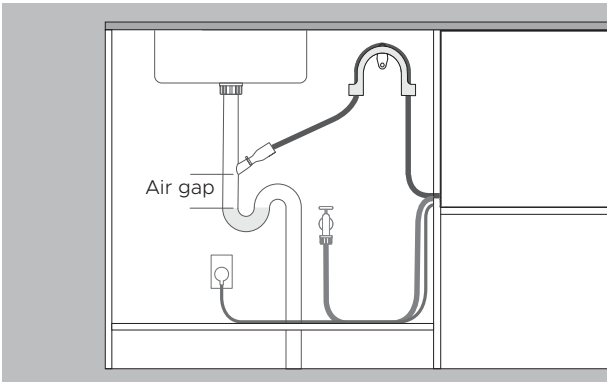

Drainage routed to spigot

- Spigot must be higher than standing water with an air gap between to avoid drainage issues.
- Remove excess drain hose to prevent hose drooping below the spigot height.

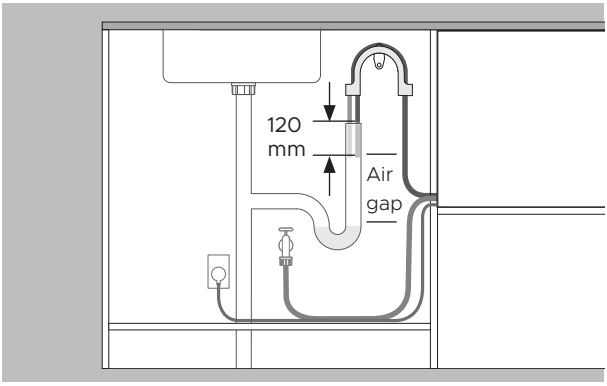

Drainage routed to standpipe

- Drain hose must be higher than standing water with an air gap between to avoid drainage issues.
- Remove excess drain hose.
- Drain hose must not extend into standpipe more than 120mm.

INSTALL DRAIN

Ensure the drain hose support is properly installed and the hose is correctly threaded through to prevent damage and drainage issues.

The dishwasher must not be drained into standing water.

If the drain hose supplied is not long enough to reach your services, a 3.6m drain hose extension kit is available at fisherpaykel.com



1. Install the drain hose support as close to the countertop as possible, with a minimum distance of 750mm from the floor.

Thread the hose through the support.

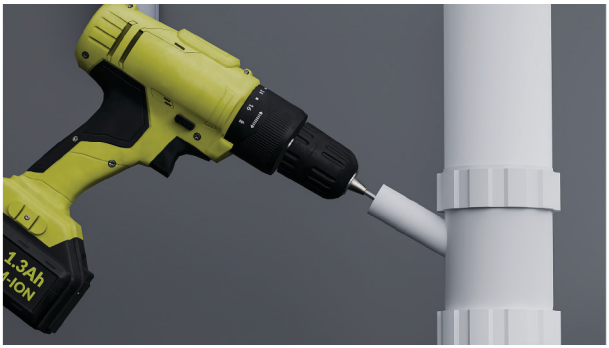

2. For connection to waste tee:

To avoid shavings entering the plumbing system, remove the waste tee before drilling.

Unplug or drill out the waste tee minimum 13mm in diameter before securing joiner.

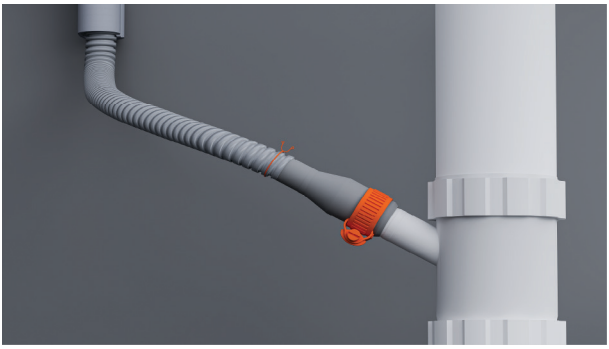

3. Thread the wire clip onto the hose.

Fit the hose to the supplied hose joiner and secure using the wire clip provided.

Ensure hose is routed straight to the joiner to avoid kinks that restrict drainage.

Trim drain hose if needed.



4. For connection to standpipe:

Pull the drain hose through the support guide and rest it in the standpipe.

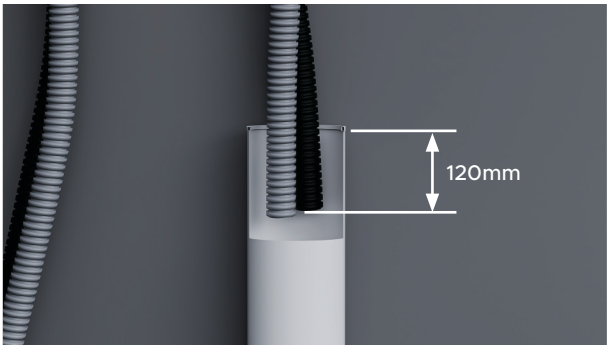

5. Ensure the hose does not extend more than 120mm into the standpipe to prevent wastewater siphoning back into the tub.

The hose can be trimmed if necessary.

CONNECT WATER INLET

Do not turn water supply on before power has been connected. The dishwasher must be powered on for flood protection to be enabled.

Isolation taps are required to allow the water supply to be shut off.

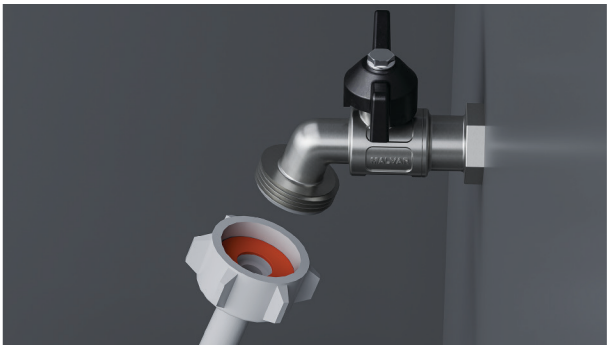

1. Check that the supplied rubber washer is inserted into the coupling.



2. Connect the inlet hose to the tap.

Ensure the inlet hose is not kinked and the tap is not pulled or under pressure.

Do not shorten the inlet hose.



3. Hand-tighten into place. Using a spanner or pliers, turn a further 180° to secure. Avoid over-tightening.

CONNECT POWER

Electrical requirements: 220 - 240V, 50 - 60Hz, 4.5A

The power plug should be accessible after installation for maintenance.



1. Connect power.

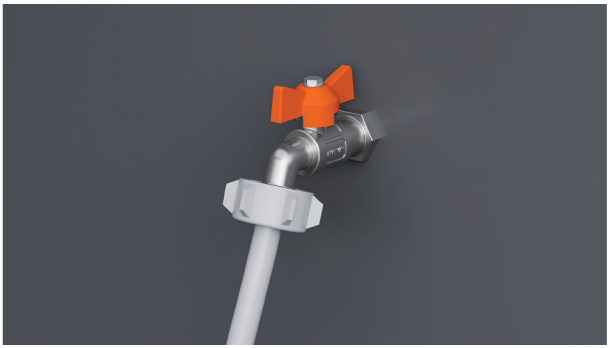

2. Check the water connections.

Turn on the water supply and check for leaks.

The dishwasher must be powered on for flood protection to be enabled.

If power is to be disconnected, ensure water supply is turned off.

INSTALLER CHECKLIST

Installation

- ☐ If power is disconnected, ensure water supply is turned off to prevent flooding.
- ☐ Check all parts are installed correctly and are secure.
- ☐ Ensure all clearance gaps have been maintained.
- ☐ Ensure dishwasher is secure and drawer opens and closes freely with no resistance.
- ☐ Ensure panel is fitted correctly to the dishwasher.
- ☐ Ensure any packaging or tape securing the racks and spray arm is removed.
- ☐ Check the spray arm is in place, mounted correctly and rotates freely.
- ☐ Ensure knock-to-pause module is fitted securely and operating correctly.
- ☐ Ensure that the sealing tape has been applied and is free of creases, folds, or air bubbles.

Plumbing

- ☐ Ensure any knock-outs or plugs in drain connection have been drilled out and drain connection has been made.
- ☐ The drain hose joiner must not support the weight of excess hose material. Keep drain hose as fully extended as possible to prevent sagging. Any excess length of drain hose should be kept on the dishwasher side of the high loop.
- ☐ Ensure inlet hose has supplied rubber washer fitted, and that it's tightened.
- ☐ If connecting the drain hose to the sink trap, ensure the high loop is a minimum 150mm higher than the drain hose joiner.
- ☐ Water softener models: adjust the water softener setting from the default setting to suit the water hardness of the area. Refer to your user guide.
- ☐ Ensure water supply is turned off until power is connected and turned on. The Dishwasher must be powered on for the flood protection feature to be enabled.

Electrical

- ☐ Ensure all electrical tests have been conducted in accordance with local regulations.

Test operation

- ☐ Turn on the power and water supplies, then open the drawer. You should hear a beep and see a program indicator light up on the control panel.
- ☐ Add three cups of water into the drawer.
- ☐ Navigate to RINSE and start the program.
- ☐ Check the knock-to-pause function
- ☐ After the Rinse cycle has finished, ensure the dishwasher has run and drained correctly.
- ☐ Check the water supply has been shut off correctly.
- ☐ Check drainage connections for leaks.
- ☐ **If site is left without power after installation is complete, ensure water supply is turned off to prevent flooding.**

INSTALLER CHECKLIST

Complete and keep for safe reference:

Model _____

Serial no. _____

Purchase date _____

Purchaser _____

Dealer address _____

Installer's name _____

Installer's signature _____

Installation company _____

Installation date _____

FISHERPAYKEL.COM

© Fisher & Paykel Appliances 2026. All rights reserved.

The models shown in this guide may not be available in all markets and are subject to change at any time.

The product specifications in this guide apply to the specific products and models described at the date of issue. Under our policy of continuous product improvement, these specifications may change at any time.

For current details about model and specification availability in your country, please go to our website or contact your local Fisher & Paykel dealer.

434527A 10.26