SERIES 9 INTEGRATED COOLDRAWER™

PLANNING GUIDE

RB36S25MKIW N 1

INTRODUCTION

This comprehensive planning guide provides you with the framework and tools to achieve your desired design outcome with Fisher & Paykel appliances. In this guide, you will find a range of conceptual, detailed, and dimensional product information to bring your ideas to life and create spaces that truly reflect your vision.

SUPPORT

For additional design planning and installation support please contact the Fisher & Paykel design support team.
designsupport@fisherpaykel.com

NOTES

The models shown in this Planning Guide may not be available in all markets and are subject to change at any time. Refer to to our website fisherpaykel.com for the latest document version. Product specifications may vary from those shown.
This Planning Guide should not be used as installation guidance for any product. Specific installation guidance will be available with the product on delivery and on our website.

CONTENTS

CONCEPT DESIGN — **PAGE**

DESIGN CHOICES
- Purchase Decisions **4**

SPECIFICATION GUIDE
- Series 9 Integrated CoolDrawer™ **6**
- Series 9 Integrated CoolDrawer™ **7**

DEVELOPED AND DETAILED DESIGN — **PAGE**

DATA SHEETS
- Main Body (No Door Panel) **9**
- Stainless Steel Door Panel **10**
- Custom Door Panel (Dual) **11**
- Custom Door Panel (Single) **12**

VENTING SPECIFICATIONS
- Venting Options **14**
- Cabinetry Dimensions **15**

DOOR PANEL OPTIONS
- Stainless Steel Door Panel **17**
- Custom Door Panel (Dual) **18**
- Custom Door Panel (Single) **19**

DEVELOPED AND DETAILED DESIGN — **PAGE**

CUSTOM DOOR PANEL PREPARATION
- Custom Door Panel Preparation **21**

SERVICES
- Electrical Specifications **23**

© FISHER & PAYKEL APPLIANCES LIMITED 2026

DESIGN CHOICES

© FISHER & PAYKEL APPLIANCES LIMITED 2026

BASE MODEL + **DOOR PANEL STYLE** + **HANDLE OPTIONS**

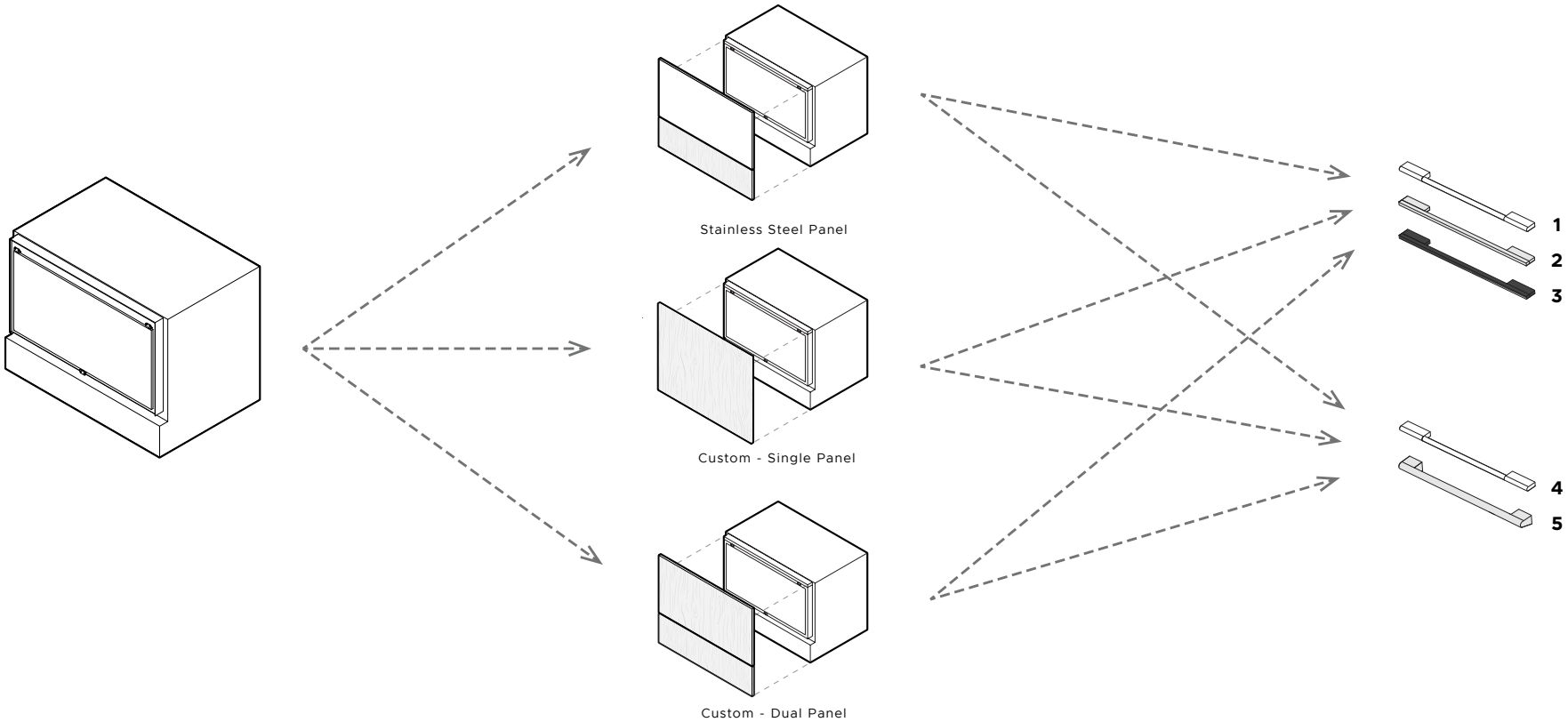

BASE MODEL	MODELS
Integrated CoolDrawer™	RB36S25MKIW N 1

DOOR PANEL MODELS	
Stainless Steel Door Panel	RD3625S
Custom Door Panel	

HANDLE MODELS		
1	Stainless steel - Classic handle	AHCLRD36S
2	Stainless steel silver - Square fine door handle	AHD5RD36S
3	Stainless steel black - Square fine handle	AHD5RD36SB
4	Aluminium silver - Contemporary round door handle	AHSRB36S
5	Stainless steel - Professional round flush handle	AHP3RD36S

The models shown in this Planning Guide may not be available in all markets and are subject to change at any time. Product specifications may vary from those shown. This Planning Guide should not be used as installation guidance for any product. Further information is required to safely and correctly install the products featured here. Specific installation guidance will be available with the product on delivery and on our website fisherpaykel.com

© FISHER & PAYKEL APPLIANCES LIMITED 2026

SPECIFICATION GUIDE

© FISHER & PAYKEL APPLIANCES LIMITED 2026

OVERVIEW

Designed for seamless integration, the CoolDrawer™ provides adaptable cooling for any space with five temperature modes; Freezer, Fridge, Pantry, Chill, and Wine. Its fully extendable drawer and touch control panel ensure effortless operation, while panel-ready design options allow for a flush, cohesive look. Ideal for custom kitchens and multi-functional spaces, it delivers both form and function.

PRODUCTS

RB36S25MKIW N 1
36" Series 9
Integrated CoolDrawer™ Multi-temperature Drawer

FEATURES

1. Suitable for a wide range of spaces, from kitchens to entertainment areas - offering versatile cooling solutions
2. Five temperature modes; Freezer, Fridge, Pantry, Chill, and Wine
3. Designed for flush installation with minimal 5/32 (4mm) gaps, ensuring a seamless integrated look
4. Panel-ready design allows for stainless steel or custom finishes, blending effortlessly with cabinetry
5. Intuitive touch controls enable effortless temperature adjustments.
6. Full-extension drawer glides smoothly for easy access to stored items
7. LED lighting illuminates the interior, enhancing visibility and ease of use.
8. ActiveSmart™ Foodcare helps keep food fresher for longer

The models shown in this Planning Guide may not be available in all markets and are subject to change at any time. Product specifications may vary from those shown. This Planning Guide should not be used as installation guidance for any product. Further information is required to safely and correctly install the products featured here. Specific installation guidance will be available with the product on delivery and on our website fisherpaykel.com

SPECIFICATIONS

Model Number	
RB36S25MKIW N 1	Series 9, Integrated CoolDrawer™

Weight	
Packaged	148 lb (67Kg)
Unpackaged	128 lb (58Kg)

Electrical	
Supply	110 V, 60 Hz
Service	10 A
Connection	3-pin earthing type

PRODUCT DIMENSIONS

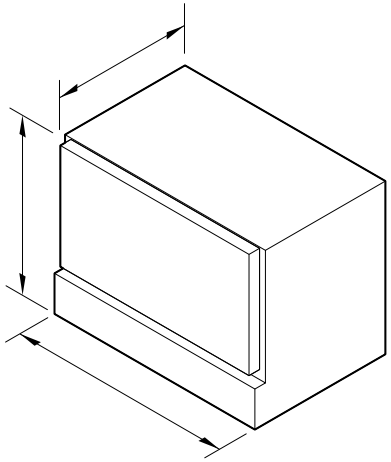

ISOMETRIC VIEW

Product Dimensions	**Inch**	**mm**
Ⓐ Overall depth	21 15/16	557
Ⓑ Overall height	25 3/16	640
Ⓒ Overall width	33 11/16	855

CAVITY DIMENSIONS: STANDARD INSTALLATION

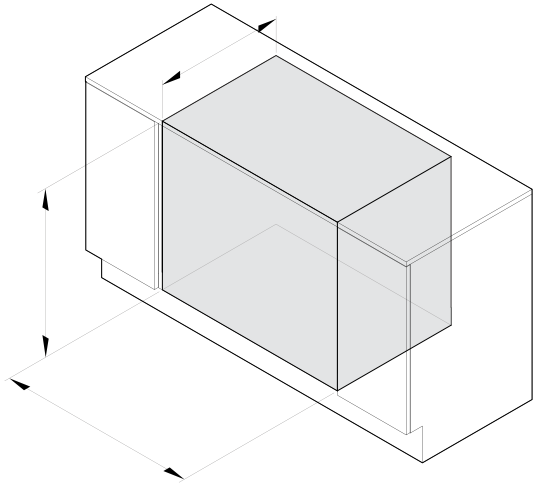

ISOMETRIC VIEW

Cavity Dimensions	**Inch**	**mm**
Ⓐ Minimum cavity depth	22 1/16	560
Ⓑ Minimum cavity height	25 3/8	644
Ⓒ Minimum cavity width	34 1/32	864

The models shown in this Planning Guide may not be available in all markets and are subject to change at any time. Product specifications may vary from those shown. This Planning Guide should not be used as installation guidance for any product. Further information is required to safely and correctly install the products featured here. Specific installation guidance will be available with the product on delivery and on our website fisherpaykel.com

DATA SHEETS

© FISHER & PAYKEL APPLIANCES LIMITED 2026

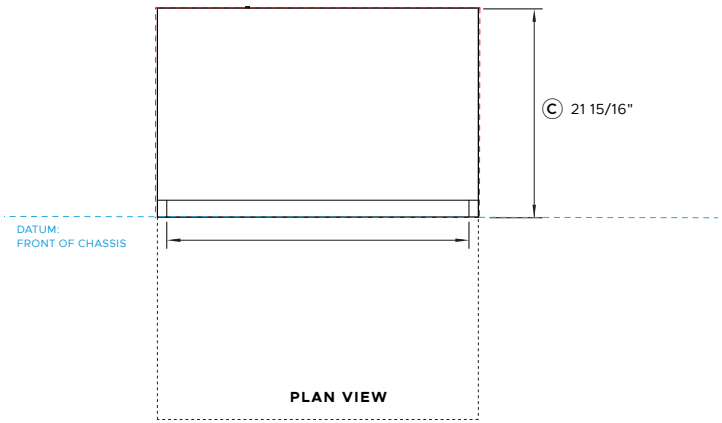

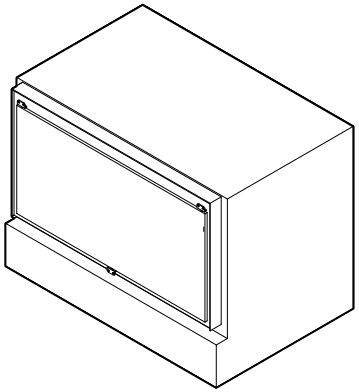

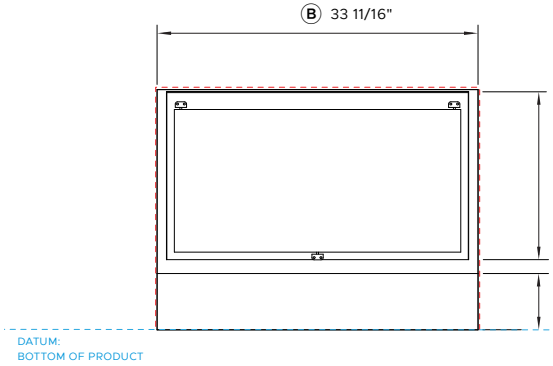

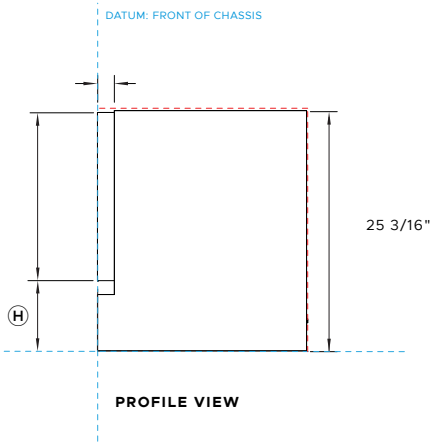

Model no:

RB36S25MKIW N 1 Series 9, Integrated CoolDrawer™

NOTE: Refer to the Purchase Decision page for all door panel and handle options, and to the Door Panel Options page for detailed panel information.

Product Dimensions	**Inch**	**mm**
A Overall height of product	25 3/16	640
B Overall width of product	33 11/16	855
C Overall depth of product (without handle and door panel)	21 15/16	557
D Width of inner door	31 11/16	805
E Thickness of inner door	1 25/32	45
F Height of inner door	17 5/8	448
G Height of lower chassis	5 29/32	150
H Height from base of product to base of door	7 3/8	187

Minimum Clearances	**Inch**	**mm**
Minimum inside height of cavity	25 3/8	644
Minimum inside width of cavity	34 1/32	864
Minimum overall depth of cavity	22 1/16	560
Minimum clearance to corner cupboard	1/2	13
Minimum clearance to adjacent cupboard door	3/32	2
Minimum clearance to underside of benchtop	3/32	2

NOTE: For venting consideration for the toe kick design, please refer to the venting page and installation guide. Custom door panels, toekick and handles to be manufactured / fitted by cabinetmaker.

- - - - - - INDICATES CABINETRY / PRODUCT DATUM
- - - - - - INDICATES CABINETRY CLEARANCES
- - - - - - INDICATES CUTOUT

IMPORTANT NOTE: Throughout this guide, dimensions may vary by ±2mm (1/16''). Please read the installation manual for detailed information on installing the product. For full installation instructions & specifications visit fisherpaykel.com

© FISHER & PAYKEL APPLIANCES LIMITED 2026

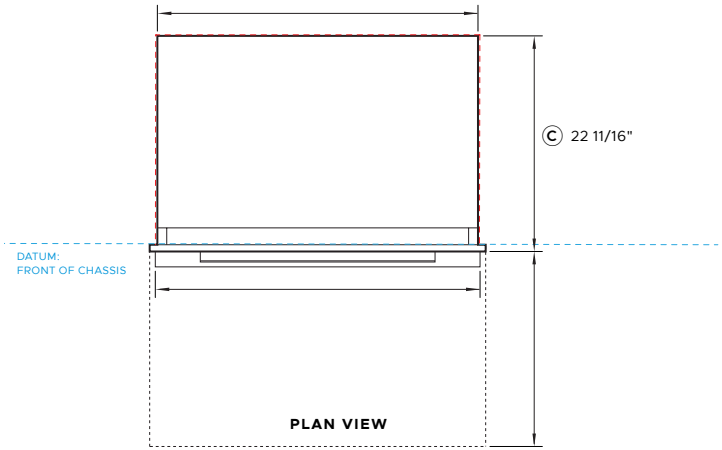

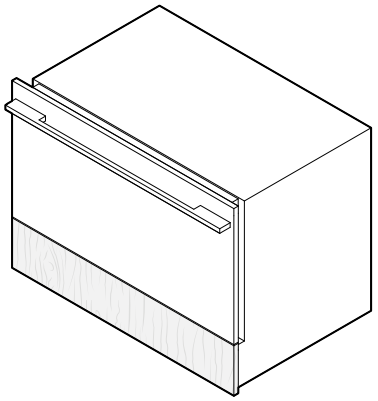

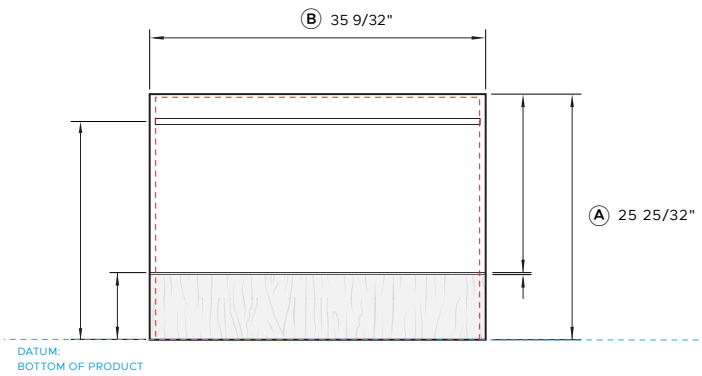

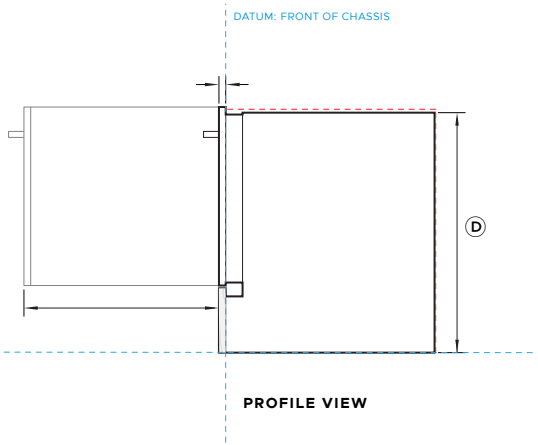

Model no:

RB36S25MKIW N 1 Series 9, Integrated CoolDrawer™

Shown with:

RD3625S	Stainless Steel Door Panel
AHD5RD36S	Contemporary Square Fine Handle*

* Not supplied. Custom door panels to be manufactured / fitted by cabinetmaker. Handle dimensions identical between colour variants.

NOTE: Refer to the Purchase Decision page for all door panel and handle options, and to the Door Panel Options page for detailed panel information.

Product Dimensions	**Inch**	**mm**
A Overall height of product	25 25/32	655
B Overall width of product	35 3/4	908
C Overall depth of product (Excluding handle)	22 11/16	576
D Height of chassis	25 3/16	640
E Width of chassis	33 11/16	855
F Height from bottom datum to bottom of drawer panel	6 7/8	175
G Height from bottom datum to centre of handle	22 29/32	582
H Width of handle	34 3/32	866
I Height of stainless steel door panel	18 3/4	476
J Minimum clearance between panels	5/32	4
K Thickness of door panel	3/4	19
L Maximum extension of drawer	20 3/4	527

Minimum Clearances	**Inch**	**mm**
Minimum inside height of cavity	25 3/8	644
Minimum inside width of cavity	34 1/32	864
Minimum overall depth of cavity	22 1/16	560
Minimum clearance to corner cupboard	1/2	13
Minimum clearance to adjacent cupboard door	3/32	2
Minimum clearance to underside of benchtop	3/32	2

NOTE: For venting consideration for the toe kick design, please refer to the venting page and installation guide. Custom door panels, toekick and handles to be manufactured / fitted by cabinetmaker.

- - - - - - INDICATES CABINETRY / PRODUCT DATUM
- - - - - - INDICATES CABINETRY CLEARANCES
- - - - - - INDICATES CUTOUT

IMPORTANT NOTE: Throughout this guide, dimensions may vary by ±2mm (1/16''). Please read the installation manual for detailed information on installing the product. For full installation instructions & specifications visit fisherpaykel.com

© FISHER & PAYKEL APPLIANCES LIMITED 2026

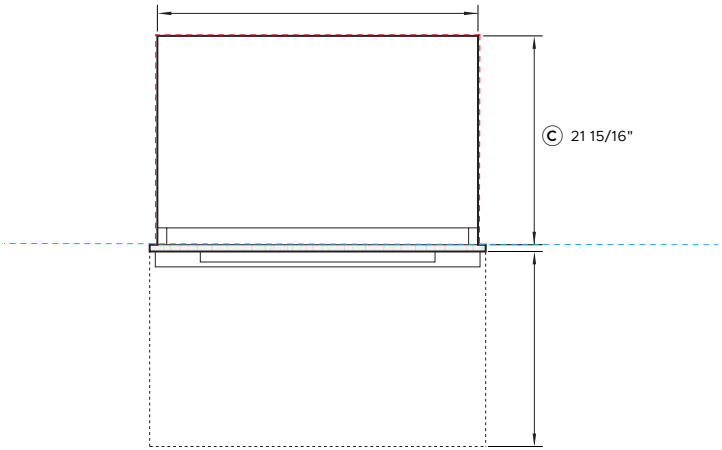

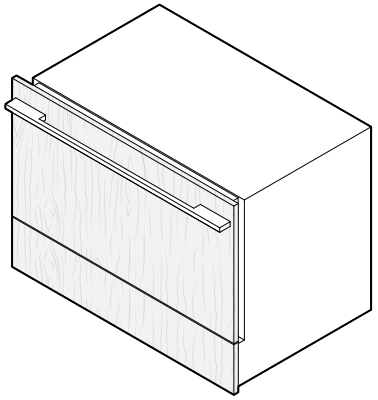

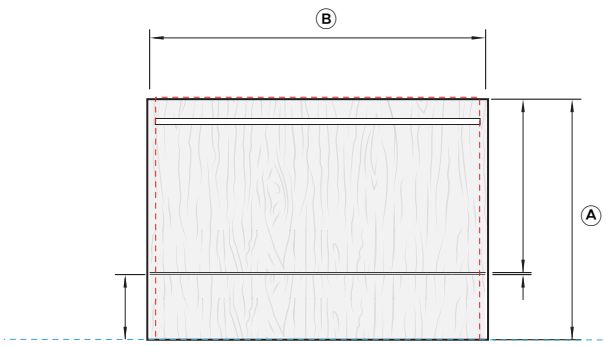

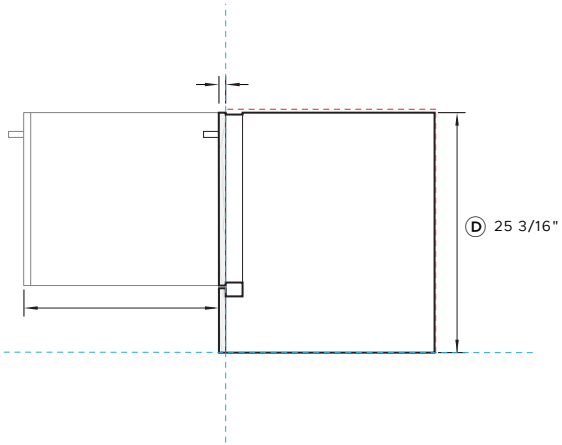

Model no:

RB36S25MKIW N 1 Series 9, Integrated CoolDrawer™

Shown with:

	Custom Door Panel - Dual*
AHD5RD36S	Contemporary Square Fine Handle**

* Not supplied. Custom door panels to be manufactured / fitted by cabinetmaker.
** Optional, not supplied. Custom handle can be used and adjusted to fit at any height within reason on a custom door panel.

NOTE: 15 lb (7Kg) Maximum weight custom of door panel and handle. Refer to the Purchase Decision page for all door panel and handle options, and to the Door Panel Options page for detailed panel information.

Product Dimensions	**Inch**	**mm**
A Overall height of product	min 25 3/16	min 640
B Overall width of custom door panel	min 33 7/8	min 860
C Depth of chassis	21 15/16	557
D Height of chassis	25 3/16	640
E Width of chassis	33 11/16	855
F Height of custom door panel*	min 17 31/32	min 456
G Height from bottom datum to top of false panel	5 29/32 - 7 3/32	150 - 180
H Minimum clearance between custom panels	5/32	4
I Thickness of door panel	5/8 - 25/32	16 - 20
J Maximum extension of drawer	20 3/4	527

Minimum Clearances	**Inch**	**mm**
Minimum inside height of cavity	25 3/8	644
Minimum inside width of cavity	34 1/32	864
Minimum overall depth of cavity	22 1/16	560
Minimum clearance to corner cupboard	1/2	13
Minimum clearance to adjacent cupboard door	3/32	2
Minimum clearance to underside of benchtop	3/32	2

NOTE: For venting consideration for the toe kick design, please refer to the venting page and installation guide. Custom door panels, toekick and handles to be manufactured / fitted by cabinetmaker.

------ INDICATES CABINETRY / PRODUCT DATUM
------ INDICATES CABINETRY CLEARANCES
------ INDICATES CUTOUT

IMPORTANT NOTE: Throughout this guide, dimensions may vary by ±2mm (1/16''). Please read the installation manual for detailed information on installing the product. For full installation instructions & specifications visit fisherpaykel.com

© FISHER & PAYKEL APPLIANCES LIMITED 2026

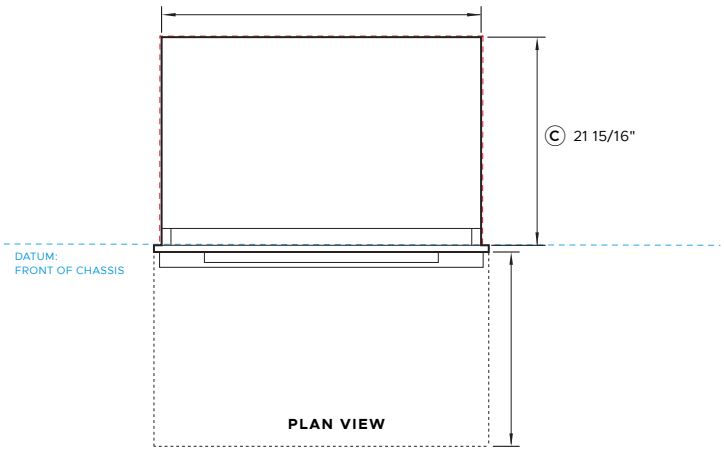

PLAN VIEW

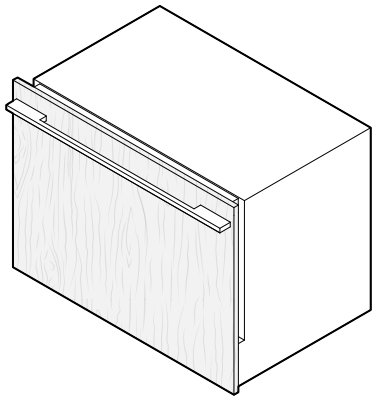

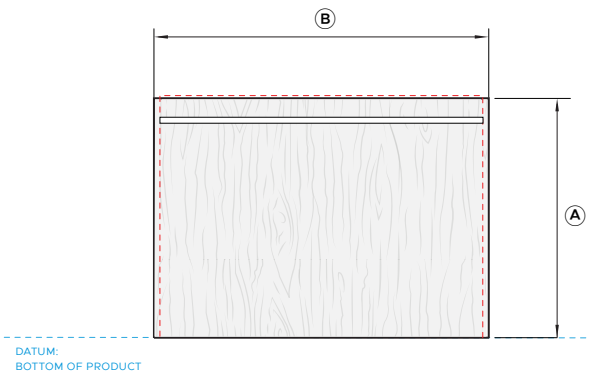

FRONT VIEW

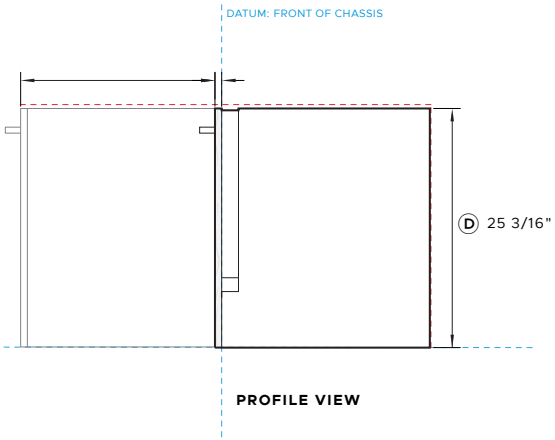

PROFILE VIEW

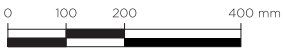

Model no:

RB36S25MKIW N 1 Series 9, Integrated CoolDrawer™

Shown with:

	Custom Door Panel - Single*
AHD5RD36S	Contemporary Square Fine Handle**

* Not supplied. Custom door panels to be manufactured / fitted by cabinetmaker.
** Optional, not supplied. Custom handle can be used and adjusted to fit at any height within reason on a custom door panel.

NOTE: 15 lb (7Kg) Maximum weight custom of door panel and handle. Refer to the Purchase Decision page for all door panel and handle options, and to the Door Panel Options page for detailed panel information.

Product Dimensions	**Inch**	**mm**
A Overall height of custom door panel	min 25 3/16	min 640
B Overall width of custom door panel	min 33 7/8	min 860
C Overall depth of product (excluding handle and door panel)	21 15/16	557
D Height of chassis	25 3/16	640
E Width of chassis	33 11/16	855
F Thickness of custom door panel	5/8 - 25/32	16-20
G Maximum extension of drawer	20 3/4	527

Minimum Clearances	**Inch**	**mm**
Minimum inside height of cavity	25 3/8	644
Minimum inside width of cavity	34 1/32	864
Minimum overall depth of cavity	22 1/16	560
Minimum clearance to corner cupboard	1/2	13
Minimum clearance to adjacent cupboard door	3/32	2
Minimum clearance to underside of benchtop	3/32	2

NOTE: For venting consideration for the toe kick design, please refer to the venting page and installation guide. Custom door panels, toekick and handles to be manufactured / fitted by cabinetmaker.

- - - - - - INDICATES CABINETRY / PRODUCT DATUM
- - - - - - INDICATES CABINETRY CLEARANCES
- - - - - - INDICATES CUTOUT

IMPORTANT NOTE: Throughout this guide, dimensions may vary by ±2mm (1/16''). Please read the installation manual for detailed information on installing the product. For full installation instructions & specifications visit fisherpaykel.com

© FISHER & PAYKEL APPLIANCES LIMITED 2026

VENTING SPECIFICATIONS

© FISHER & PAYKEL APPLIANCES LIMITED 2026

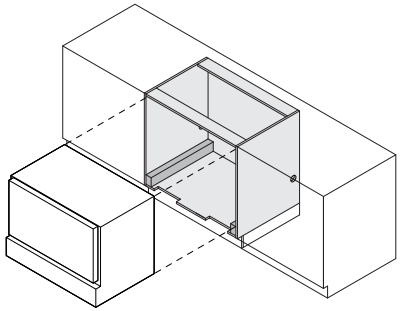

ISOMETRIC VIEW (PRODUCT AND CABINETRY)

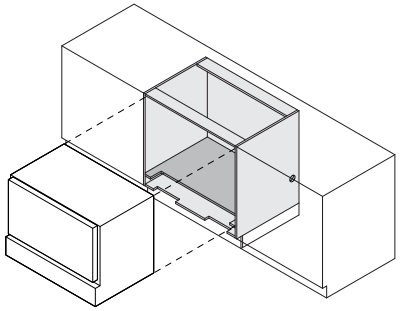

ISOMETRIC VIEW (PRODUCT AND CABINETRY)

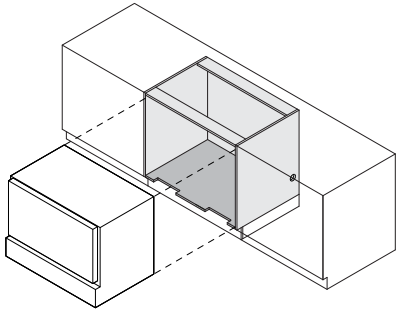

ISOMETRIC VIEW (PRODUCT AND CABINETRY)

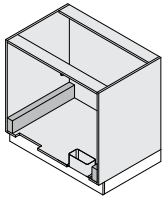

ISOMETRIC VIEW (CABINETRY AND VENTING COMPONENTS)

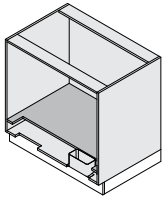

ISOMETRIC VIEW (CABINETRY AND VENTING COMPONENTS)

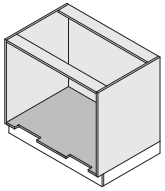

ISOMETRIC VIEW (CABINETRY AND VENTING COMPONENTS)

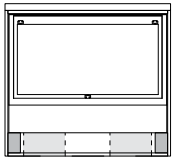

FRONT VIEW (PRODUCT AND CABINETRY)

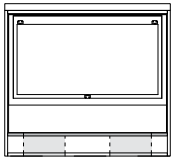

FRONT VIEW (PRODUCT AND CABINETRY)

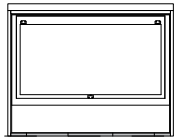

FRONT VIEW (PRODUCT AND CABINETRY)

Min 1 31/32" Toekick

Min 1 31/32" Toekick

COOLDRAWER™ ON SPACERS

The CoolDrawer™ is elevated within the cabinetry, resting on a minimum of 25/32" (20mm) spacers on both sides to ensure adequate ventilation. For details on installation, please refer to the installation guide.

COOLDRAWER™ ON FIXED SHELF

The CoolDrawer™ is elevated within the cabinetry on a fixed internal shelf, which can be used as an alternative to spacers for positioning the drawer at the correct height. The shelf requires a critical rebate cut of at least 4 1/32" (102mm) in depth at the front to ensure proper clearance and ventilation. For details on installation please refer to installation guide.

COOLDRAWER™ ON BASE SHELF

The CoolDrawer™ is placed directly on the bottom shelf without a spacer or internal shelf. This installation depends on the height of your cabinetry, which must be adjusted to accommodate the chassis and required cavity clearances. Bottom of the shelf/MDF shall be sealed to prevent moisture damage. For details on installation please refer to installation guide.

The models shown in this Planning Guide may not be available in all markets and are subject to change at any time. Product specifications may vary from those shown. This Planning Guide should not be used as installation guidance for any product. Further information is required to safely and correctly install the products featured here. Specific installation guidance will be available with the product on delivery and on our website fisherpaykel.com

COOLDRAWER™ ON SPACERS

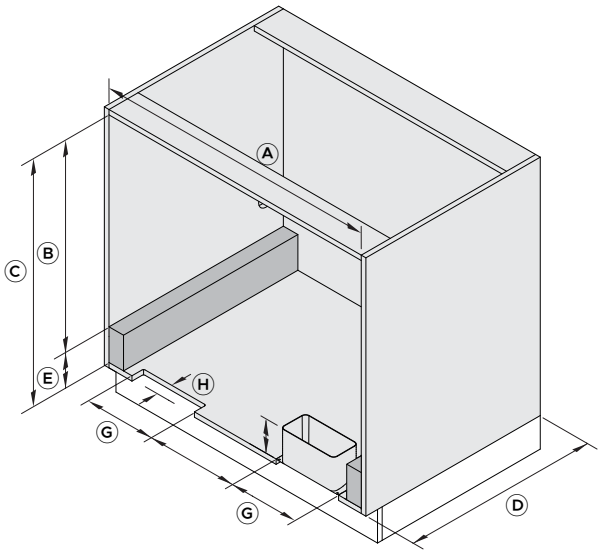

Dimensions	Inch	mm
Ⓐ Width of cavity	min 34 1/32	min 864
Ⓑ Height from top of spacer to inner face of cabinetry*	min 25 3/8	min 644
Ⓒ Overall height of cavity	min 26 5/32	min 664
Ⓓ Depth of cavity	min 22 1/16	min 560
Ⓔ Height of spacer	25/32-4 23/32	20-120
Ⓕ Width of spacer	1 31/32	50
Ⓖ Width of vent duct cutout	8 15/32	215
Ⓗ Depth of vent duct cutout	1 9/16	40
Ⓘ Height of Vent duct	25/32-4 23/32	20-120
Ⓙ Clearance between vent ducts cutouts	11 1/32	280

COOLDRAWER™ ON FIXED SHELF

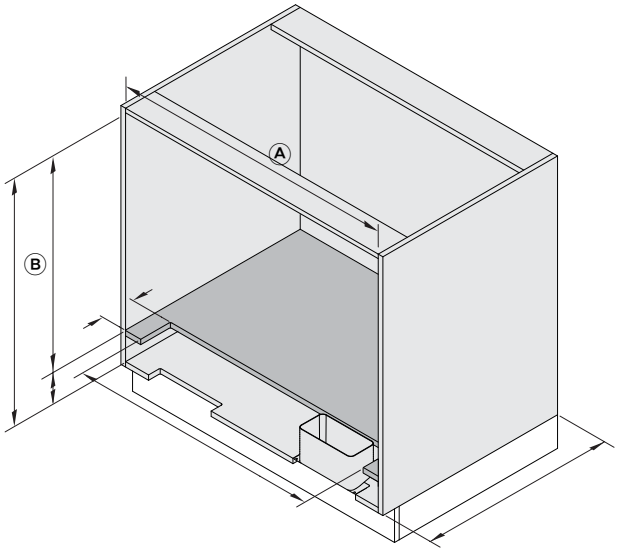

Dimensions	Inch	mm
Ⓐ Width of cavity	min 34 1/32	min 864
Ⓑ Height of cavity above internal shelf	min 25 3/8	min 644
Ⓒ Height of internal shelf and cavity below	25/32-4 23/32	20-120
Ⓓ Overall height of cavity	min 26 5/32	min 664
Ⓔ Depth of cavity	min 22 1/16	min 560
Ⓕ Depth of cutout at front end of internal shelf	min 4 1/32	min 102
Ⓖ Width of internal shelf cutout	min 30 3/32	min 764

COOLDRAWER™ ON BASE SHELF

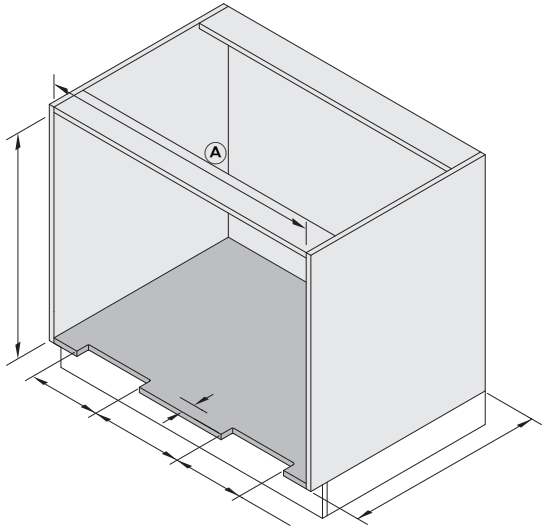

Dimensions	Inch	mm
Ⓐ Width of cavity	min 34 1/32	min 864
Ⓑ Height of cavity	min 25 3/8	min 644
Ⓒ Depth of cavity	min 22 1/16	min 560
Ⓓ Width of vent cutout	8 15/32	215
Ⓔ Depth of vent duct cutout	1 9/16	40
Ⓕ Clearance between vent ducts cutouts	11 1/32	280

The models shown in this Planning Guide may not be available in all markets and are subject to change at any time. Product specifications may vary from those shown. This Planning Guide should not be used as installation guidance for any product. Further information is required to safely and correctly install the products featured here. Specific installation guidance will be available with the product on delivery and on our website fisherpaykel.com

© FISHER & PAYKEL APPLIANCES LIMITED 2026

DOOR PANEL OPTIONS

© FISHER & PAYKEL APPLIANCES LIMITED 2026

STAINLESS STEEL DOOR PANEL DIMENSIONS

Model:
Series 9 Integrated CoolDrawer™ - RB36S25MKIW N 1

Drawer Panel Dimensions	Inch	mm
Ⓐ Height of stainless steel door panel	18 3/4	476
Ⓑ Width of stainless steel door panel	35 9/32	896
Ⓒ Thickness of stainless steel door panel	3/4	19
Ⓓ Top of chassis to top of steel door panel	19/32	15

False Panel Dimensions	Inch	mm
Ⓔ Height of false panel	6 7/8	175
Ⓕ Width of false panel	35 9/32	896
Ⓖ Thickness of false panel	5/8 - 25/32	16 - 20

Clearance Dimensions	Inch	mm
Ⓗ Clearance between top of door panel and underside of benchtop	min 3/32	min 2
Ⓘ Clearance between front end of benchtop to front surface of door panel	max 25/32	max 20
Ⓙ Gap between drawer panel and false panel	5/32	4
Ⓚ Depth from front of carcass to kick panel	min 1 19/32	min 40
Ⓛ Minimum height from bottom of custom false panel to floor	min 2	min 50

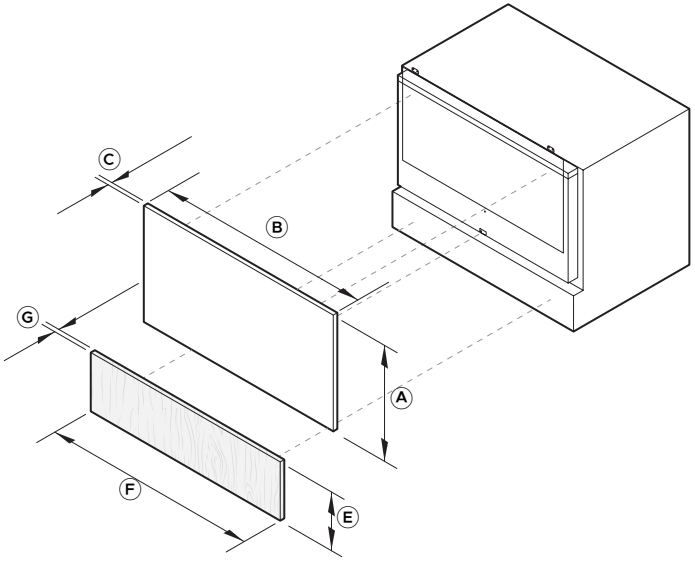

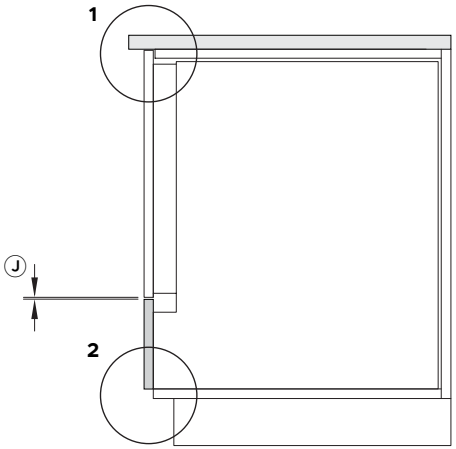

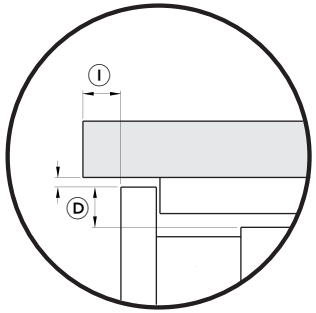

DETAIL 1: UPPER CABINETRY CLEARANCE

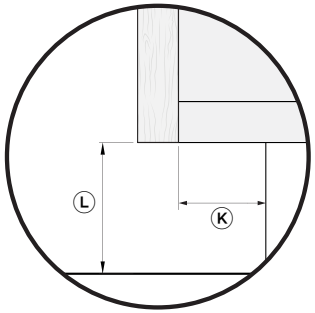

DETAIL 2: LOWER CABINETRY CLEARANCE

The models shown in this Planning Guide may not be available in all markets and are subject to change at any time. Product specifications may vary from those shown. This Planning Guide should not be used as installation guidance for any product. Further information is required to safely and correctly install the products featured here. Specific installation guidance will be available with the product on delivery and on our website fisherpaykel.com

© FISHER & PAYKEL APPLIANCES LIMITED 2026

CUSTOM DOOR PANEL - DUAL DIMENSIONS

Model:
Series 9 Integrated CoolDrawer™ - RB36S25MKIW N 1

Drawer Panel Dimensions	**Inch**	**mm**
Ⓐ Height of custom door panel**	min 17 31/32 max 19 1/8	min 456 max 486
Ⓑ Maximum extension from minimum door panel height*	1 3/16	30
Ⓒ Width of custom door panel	min 33 7/8	min 860
Ⓓ Thickness of custom door panel	5/8 - 25/32	16 - 20

False Panel Dimensions	**Inch**	**mm**
Ⓔ Height of custom false panel*	5 29/32 - 7 3/32	150 - 180
Ⓕ Maximum extension from minimum false panel height	1 3/16	30
Ⓖ Minimum height from bottom of inner door to bottom of custom door panel	1/8	3
Ⓗ Width of custom false panel	min 35 9/32	min 896
Ⓘ Thickness of custom false panel	5/8 - 25/32	16 - 20

Clearance Dimensions	**Inch**	**mm**
Ⓙ Clearance between top of door panel and underside of benchtop	min 3/32	min 2
Ⓚ Clearance between front end of benchtop to front surface of door panel	max 25/32	max 20
Ⓛ Gap between door panel and false panel	5/32	4
Ⓜ Height of variable split line	1 11/32	34
Ⓝ Depth from front of carcass to kick panel	min 1 19/32	min 40
Ⓞ Minimum height from bottom of custom false panel to floor	min 2	min 50

*Panels can be customised to any given height in these ranges, ensuring they keep a minimum gap of 4mm between panels.
** Where top of panel aligns with top of chassis, panel can be extended upwards in addition to stated values.

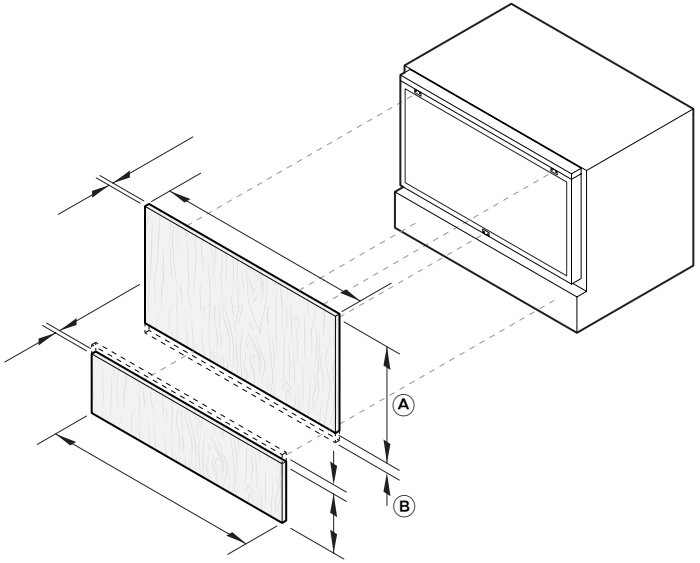

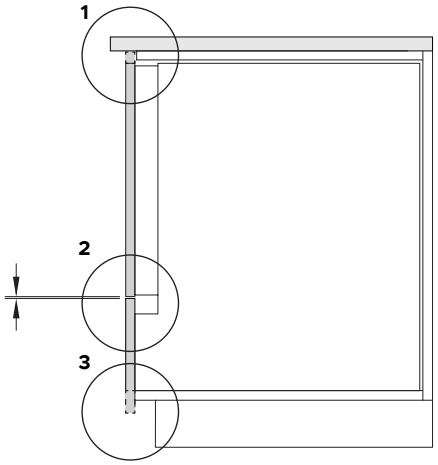

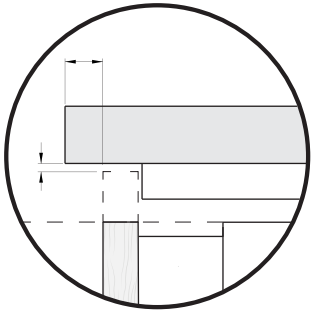

DETAIL 1: UPPER CABINETRY CLEARANCE

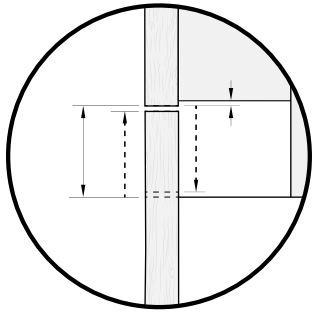

DETAIL 2: VARIABLE SPLIT LINE

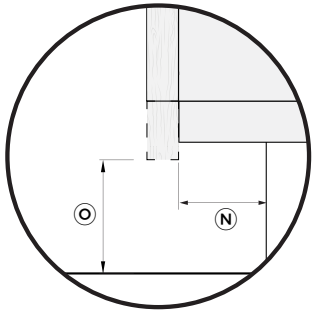

DETAIL 3: LOWER CABINETRY CLEARANCE

The models shown in this Planning Guide may not be available in all markets and are subject to change at any time. Product specifications may vary from those shown. This Planning Guide should not be used as installation guidance for any product. Further information is required to safely and correctly install the products featured here. Specific installation guidance will be available with the product on delivery and on our website fisherpaykel.com

CUSTOM DOOR PANEL - SINGLE DIMENSIONS

Model:
Series 9 Integrated CoolDrawer™ - RB36S25MKIW N 1

Drawer Panel Dimensions	Inch	mm
Ⓐ Height of custom door panel*	min 25 3/16	min 640
Ⓑ Width of custom door panel	min 33 7/8	min 860
Ⓒ Thickness of custom door panel	5/8 - 25/32	16 - 20
Ⓓ Top of chassis to top of custom door panel at minimum height	min 3/32	2

Clearance Dimensions	Inch	mm
Ⓔ Clearance between top of door panel and underside of benchtop	min 3/32	min 2
Ⓕ Clearance between front end of benchtop to front surface of door panel	max 25/32	max 20
Ⓖ Depth from front of carcass to kick panel	min 1 19/32	min 40
Ⓗ Minimum height from bottom of custom false panel to floor	min 2	min 50

*Where the custom door panel aligns with top and bottom of chassis, panel can be extended up and down.

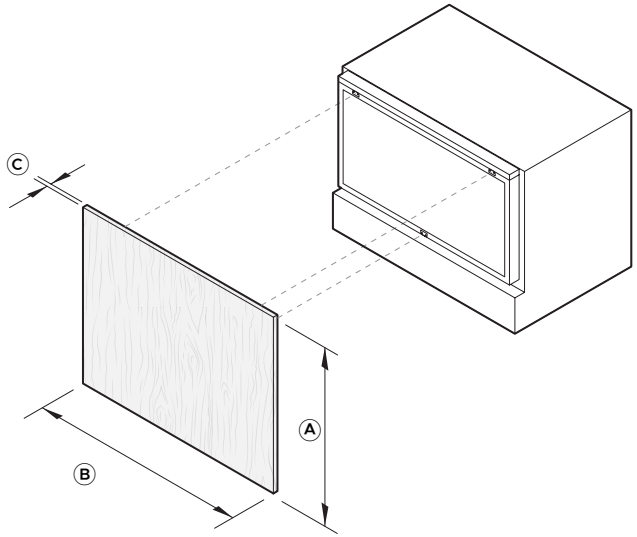

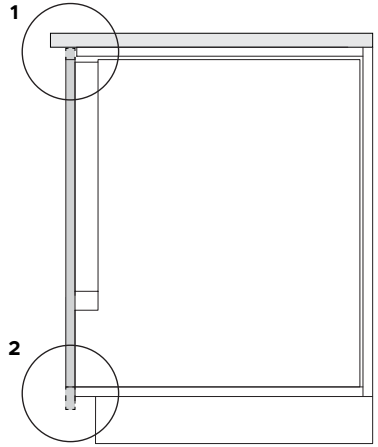

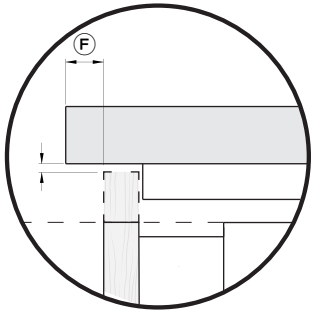

DETAIL 1: UPPER CABINETRY CLEARANCE

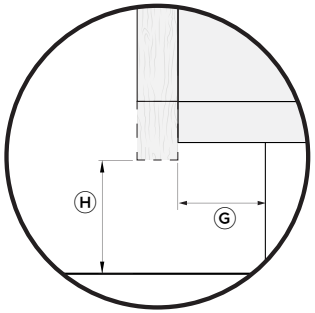

DETAIL 2: LOWER CABINETRY CLEARANCE

The models shown in this Planning Guide may not be available in all markets and are subject to change at any time. Product specifications may vary from those shown. This Planning Guide should not be used as installation guidance for any product. Further information is required to safely and correctly install the products featured here. Specific installation guidance will be available with the product on delivery and on our website fisherpaykel.com

CUSTOM DOOR PANEL PREPARATION

© FISHER & PAYKEL APPLIANCES LIMITED 2026

Custom Panel Fixing Specifications	Inch	mm
Ⓐ Distance between centre of upper internal fixings	27 15/16	710
Ⓑ Distance between centre of upper external fixings	29 3/8	746
Ⓒ Centre of upper panel fixings to top of chassis	1 1/2	38.5
Ⓓ Vertical distance between upper and lower panel fixings	16 3/32	409
Ⓔ Distance between centre of holes at fixing points	23/32	18

Note: Panel width and extensions, will vary according to your cabinet specifications.

Custom door panel and toe kicks should be manufactured and fitted by a cabinetmaker.

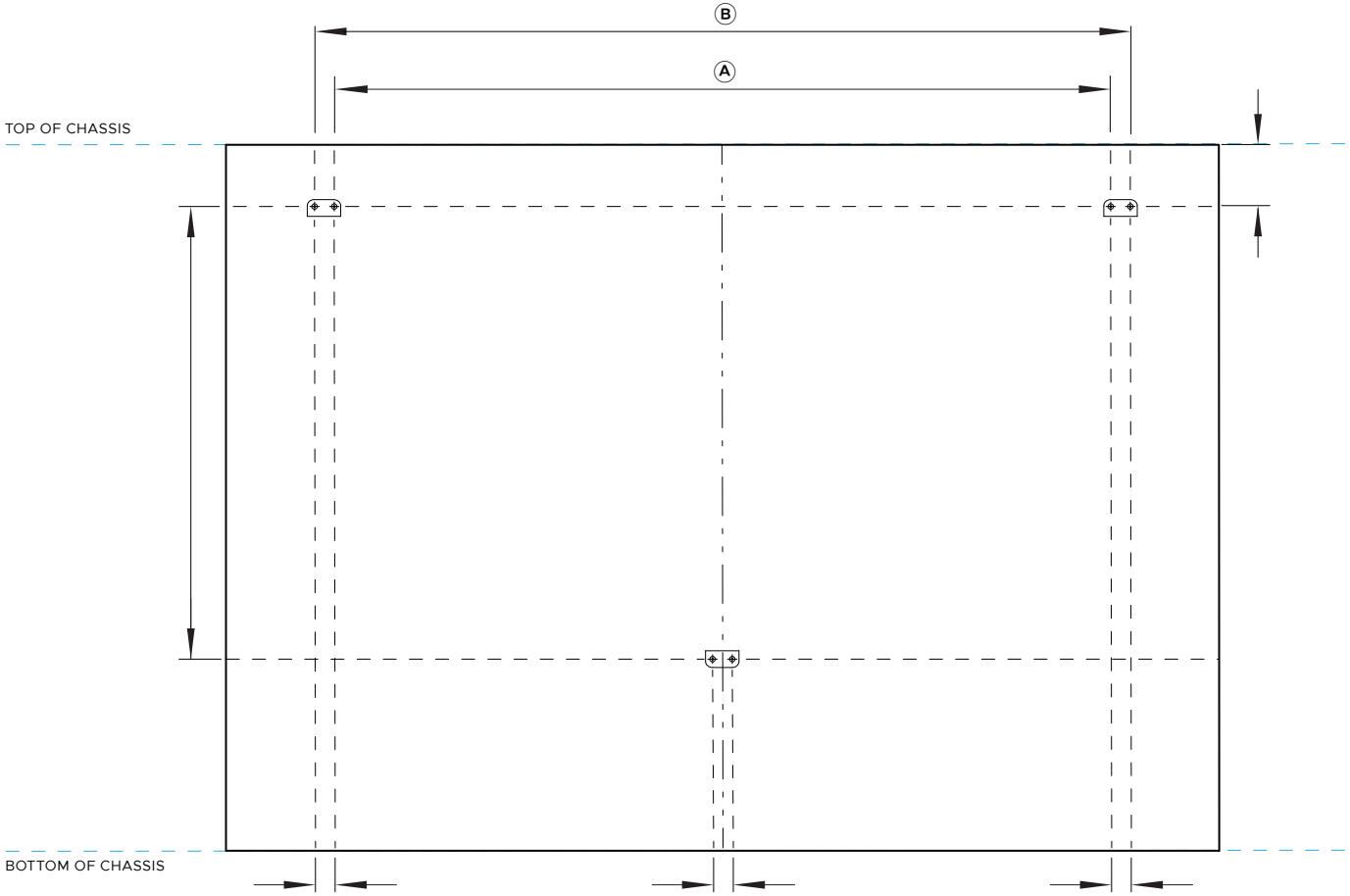

The models shown in this Planning Guide may not be available in all markets and are subject to change at any time. Product specifications may vary from those shown. This Planning Guide should not be used as installation guidance for any product. Further information is required to safely and correctly install the products featured here. Specific installation guidance will be available with the product on delivery and on our website fisherpaykel.com

© FISHER & PAYKEL APPLIANCES LIMITED 2026

SERVICES

© FISHER & PAYKEL APPLIANCES LIMITED 2026

ELECTRICAL SPECIFICATIONS

Model Number	
RB36S25MKIW N 1	Series 9 Integrated CoolDrawer™

Electrical	
Supply	110 V, 60 Hz
Service	10 A
Connection	3-pin earthing type

Power cord Dimensions	
Overall length of power cord	78 3/4"
Length of power cord from edge of appliance chassis	**Left Hand Side** - 72 27/32" **Right Hand Side** - 49 7/32"

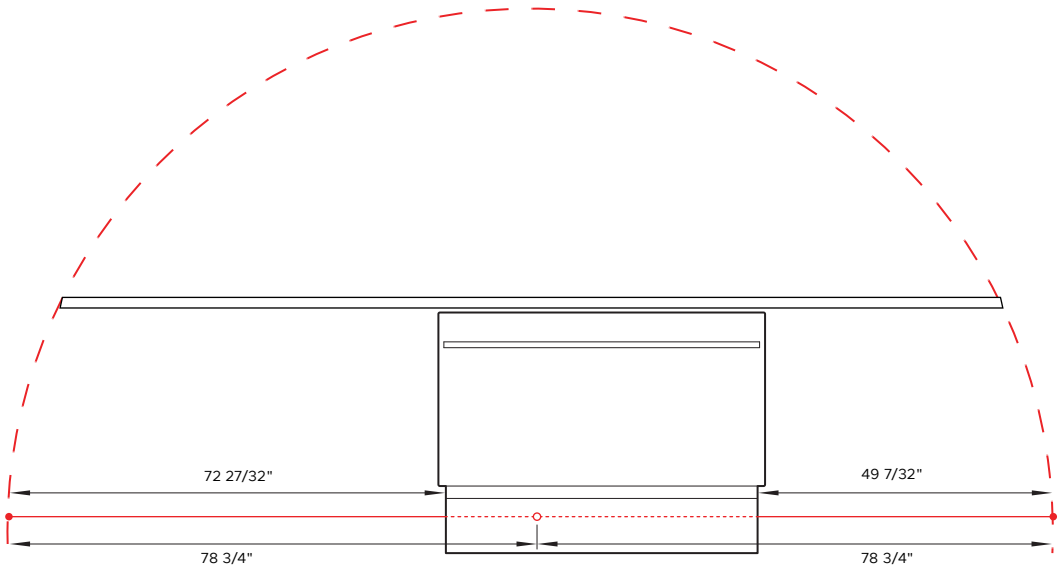

SUPPLY SPECIFICATIONS

Dimensions	**Inch**	**mm**
Ⓐ Diameter of supply area cutout	Ø 2	Ø 50
Ⓑ Distance from centre of supply area cutout to top of panel/spacer the product will be placed on	min 5 1/8	min 130
Ⓒ Distance from front end of cabinetry frame to centre of supply area cutout	min 21 1/16	min 535
Ⓓ Distance of supply area cutout to adjacent power outlet	max 33 15/32	max 850

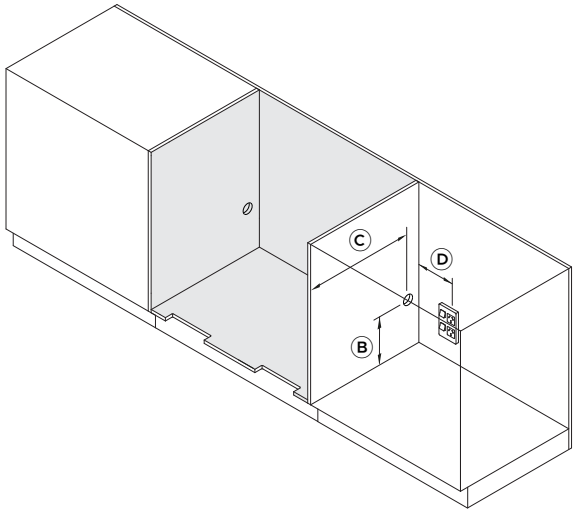

The models shown in this Planning Guide may not be available in all markets and are subject to change at any time. Product specifications may vary from those shown. This Planning Guide should not be used as installation guidance for any product. Further information is required to safely and correctly install the products featured here. Specific installation guidance will be available with the product on delivery and on our website fisherpaykel.com

© FISHER & PAYKEL APPLIANCES LIMITED 2026

FISHER & PAYKEL