DISHDRAWER™ DISHWASHER
INSTALLATION GUIDE

Components required	3
Accessing your product specifications	4
Custom panel adjustment options	6
Prior to installation	7
Install dishwasher	20
Prepare custom panels	23
Secure dishwasher	34
Adjust panel alignment vertical and horizontal	37
Install toe kick	41
Connect services	44
Installer checklist	49

FISHER & PAYKEL

CN

433800A 09.26

INTEGRATED DISHDRAWER™ DISHWASHER

DD60D4HI2U1

COMPONENTS REQUIRED

TOOLS

Not supplied

- ☐ Box cutter
- ☐ Crosshead screwdriver
- ☐ Flat blade screwdriver
- ☐ Drill
- ☐ 1x 13mm Drill bit
- ☐ 1x 2.5mm Drill bit
- ☐ Level
- ☐ Pliers
- ☐ Pencil
- ☐ 57mm Hole saw drill bit (refer to page 10)

PARTS

Supplied and required

- ☐ 4x Side mounting brackets
- ☐ 2x Top mounting brackets
- ☐ 1x Sealing tape
- ☐ 32x 16mm Cross head screws
- ☐ 1x custom toe kick mounting bracket
- ☐ 1x Drain hose support
- ☐ 1x Drain hose joiner
- ☐ 2x Wire clips
- ☐ 1x Clamp
- ☐ 10x Screw caps

Supplied

- ☐ 4x Spacer sets

To access installation videos, scan the QR code or go to: https://www.fisherpaykel.com/nz/dishdrawer-installation-videos

The videos provide an overview of the DishDrawer™ installation and are not intended to be used as a standalone guide.

Installation should be undertaken by a Fisher & Paykel trained and supported service technician or qualified person.

ACCESSING YOUR PRODUCT SPECIFICATIONS

For full product, cabinetry and service specifications, refer to the Planning Guide. To access the Planning Guide, scan the QR code or visit fisherpaykel.com/specify. Search by appliance type, product name or model code.

For installation support please contact the Fisher & Paykel design support team at designsupport@fisherpaykel.com

The cavity and under countertop base materials and surfaces must be moisture resistant. If they are not, seal or paint them with a moisture resistant coating system.

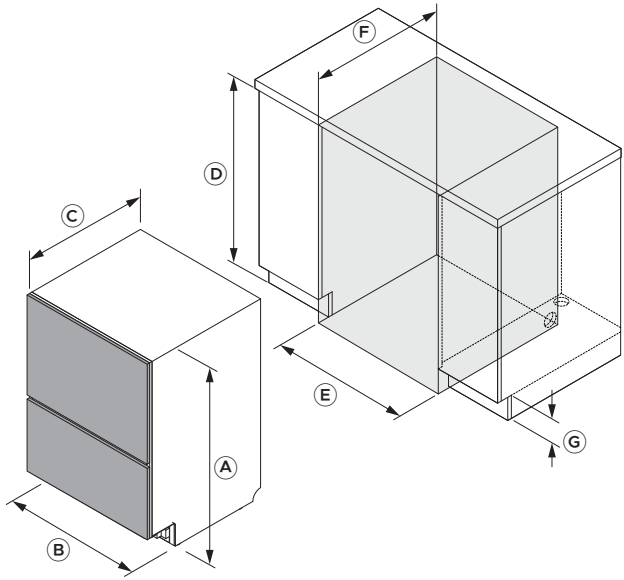

Dimensions	mm
Ⓐ Overall height (includes feet)	820 - 880
Ⓑ Chassis width	599
Ⓒ Chassis depth*	553
Ⓓ Cavity height	822 - 882
Ⓔ Cavity width	600 - 610
Ⓕ Cavity minimum depth**	580
Ⓖ Toe kick height	50 - 160

*Excludes custom or pre-finished drawer panels. **Assumes 18mm door panels. Note: A 2mm clearance gap is required between the dishwasher drawer panels and surrounding cabinet panels.

Ensure there is a small gap between the custom panel and any cabinetry behind it to maintain a proper seal in the dishwasher. This prevents moisture escape and condensation, which can damage the custom panel and adjacent cabinetry.

The custom panel material and surfaces must be moisture resistant. If they are not, seal or paint them with a moisture resistant coating system.

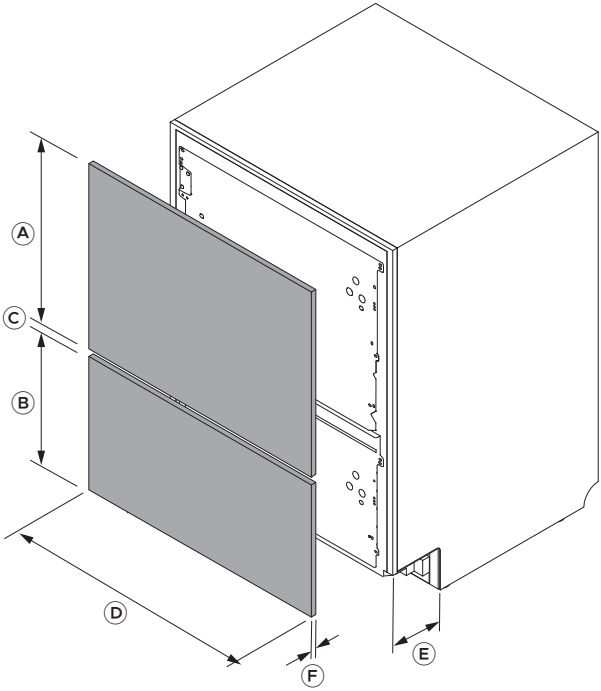

Custom Panel Dimensions	mm
Ⓐ Top panel minimum height	398
Ⓑ Bottom panel minimum height	311
Ⓒ Minimum gap between drawer panels*	8
Ⓓ Minimum panel width	596
Ⓔ Custom panel toe kick depth	40 - 102
Ⓕ Panel thickness** (shorter fixing screws will be required for panels less than 18mm thick)	16 - 25
Maximum bottom panel lower extension	50

*Ensure a minimum 8mm gap to avoid condensation issues. **Guide assumes 18mm door panels, where the panel is less than 18mm thick at any fixing point, use shorter screws (not supplied) to avoid breaking through the face of the panel.

CUSTOM PANEL ADJUSTMENT OPTIONS

Once attached, custom panels may require small adjustments to align with existing cabinet fronts. Three panel adjustments are available: side to side, up and down, and tilt. A crosshead screwdriver will be required.

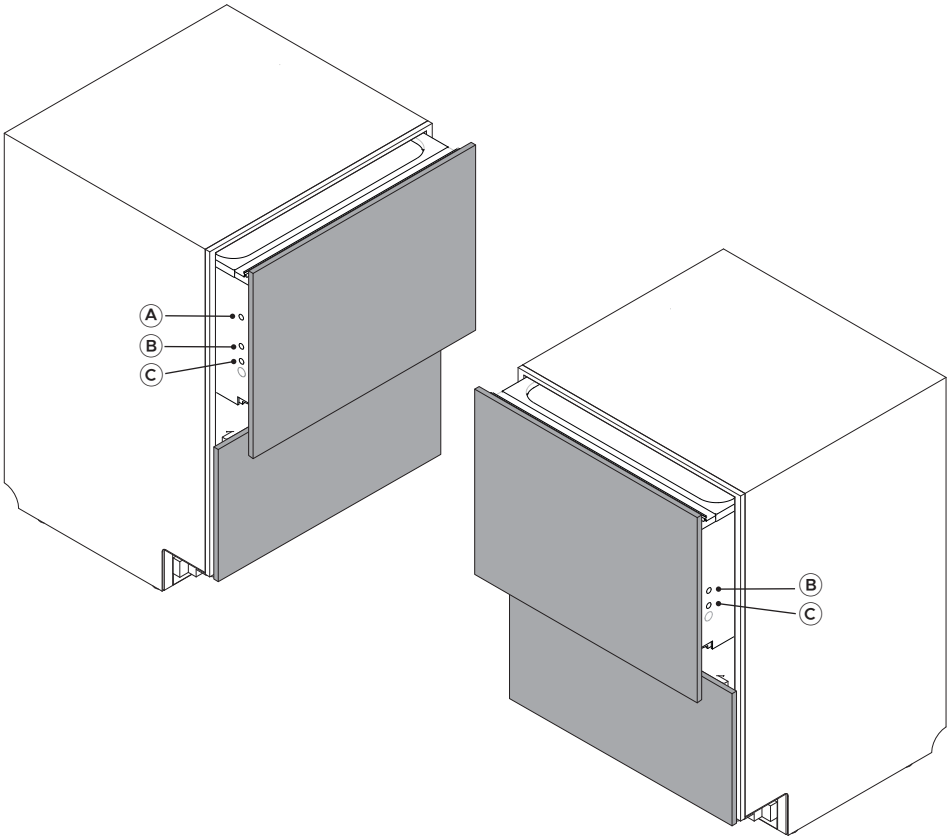

Adjustments
Ⓐ Adjust side to side (horizontal)
Ⓑ Adjust up and down (vertical)
Ⓒ Adjust panel tilt

fisherpaykel.com/specify

1. Refer to the Planning Guide for cabinetry, cavity and service specifications.

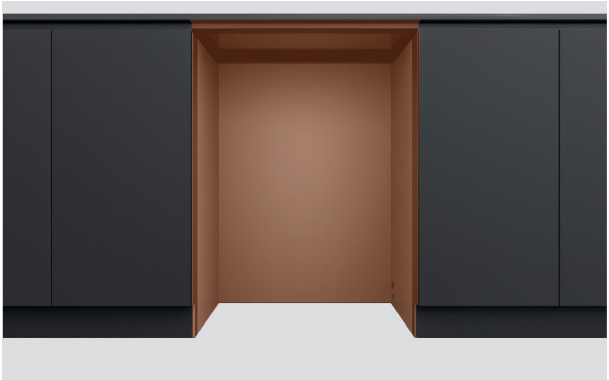

2. The cavity and under countertop base materials and surfaces must be moisture resistant.

If they are not, seal or paint them with a moisture resistant coating system.

3. Check that the cavity is clean and in good order.

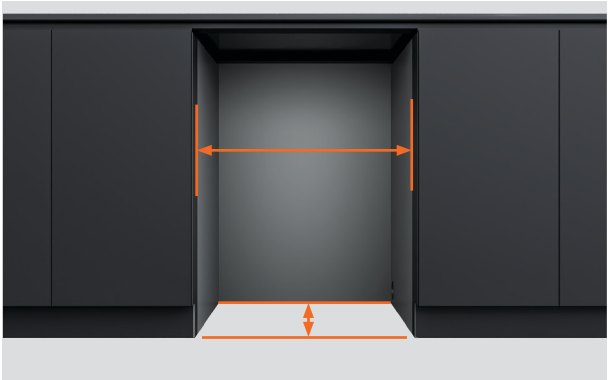

4. Ensure the cabinet meets the minimum cavity specifications required.

Check that the cabinet sides are square.

5. If the cavity is too wide, add material to the sides to allow the dishwasher to be secured.

See the planning guide for details.

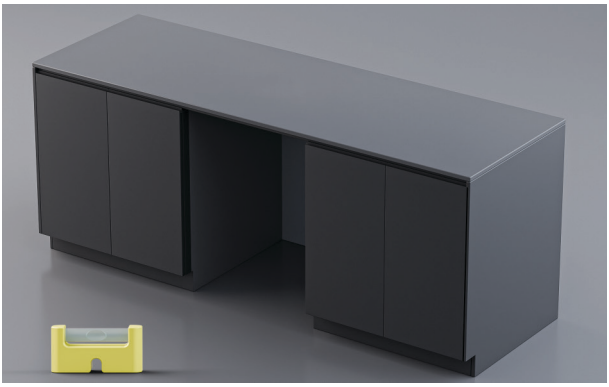

6. Check that the cabinet is level.

7. The power plug should be accessible after installation for maintenance.

8. Service holes can be routed from the dishwasher cavity into the toe kick space, then through to the adjacent cavity.

Refer to the Planning Guide at fisherpaykel.com for service options.

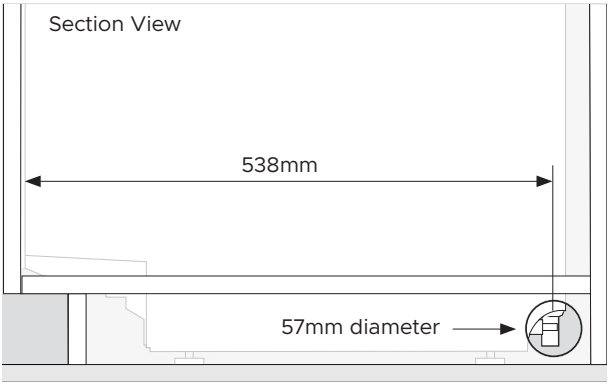

1. A minimum 57mm diameter service hole is required in the cabinet side.

The center of the hole should be a minimum of 538mm from the front of the dishwasher chassis.

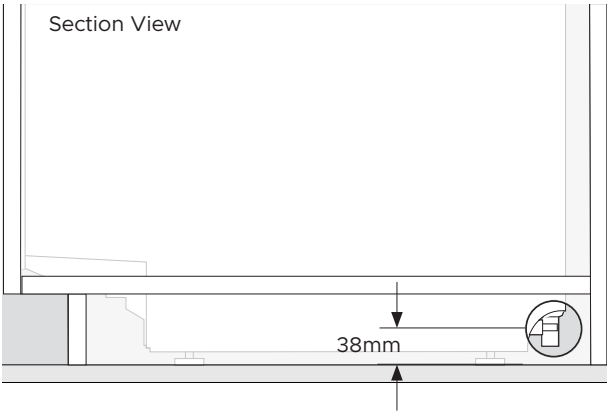

2. The center of the hole should be a maximum of 38mm from the floor or the bottom of dishwasher feet.

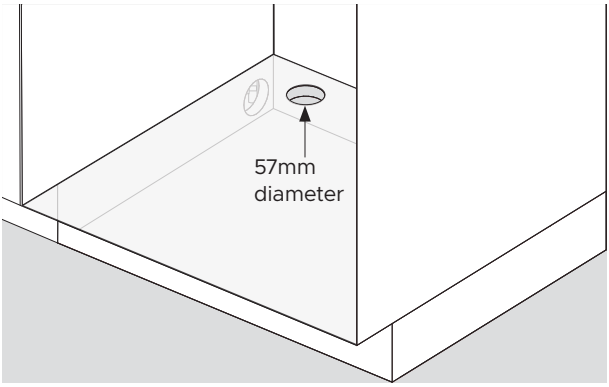

3. A 57mm diameter service hole is required in the adjacent cabinet shelf.

UNPACK ALL PRODUCTS

1. Remove the plastic wrap.

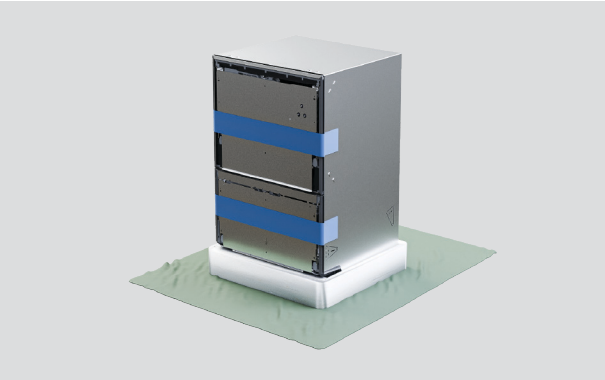

2. Protect flooring before removing the packing base.

3. To detach the base, use a trolley to lift the dishwasher from the rear, then pull the base off.

Open the top drawer carefully to prevent the dishwasher tipping.

4. Do not remove the drawer brackets from the dishwasher front.

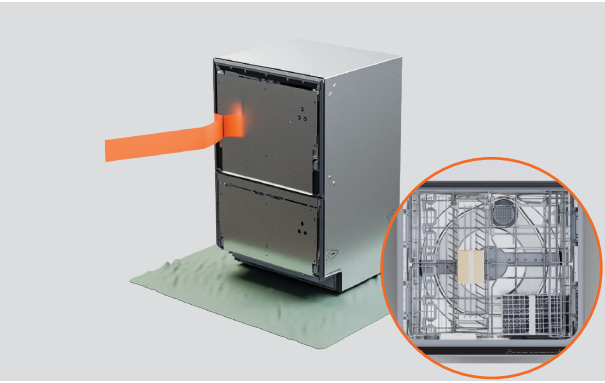

5. Peel the tape from the top drawer and remove accessories and installation packages.

Close the drawer and re-apply the tape.

6. Dispose of packaging responsibly.

APPLY SEALING TAPE

1. Ensure underside of countertop is clean and free of dust.

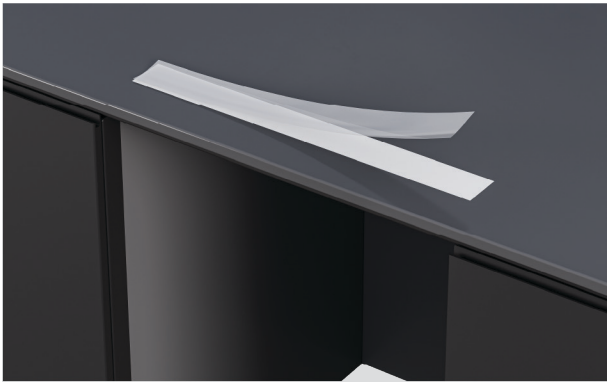

2. Remove backing from tape.

3. Apply tape centrally along the underside of the countertop or cavity edge.

The sealing tape must be free of creases, folds, or air bubbles.

DISHWASHER SECURING OPTIONS

The dishwasher must be secured to stay in place and prevent vibration. Three fixing points on each side of the chassis are recommended.

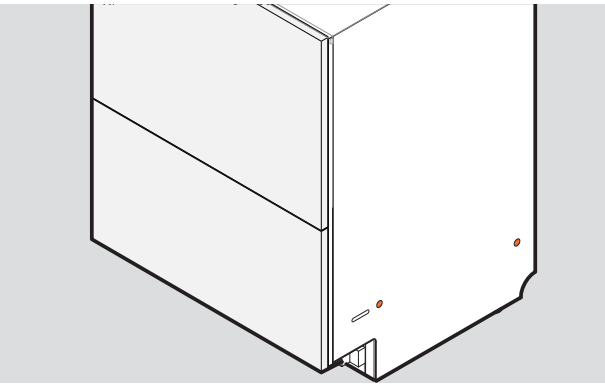

1. Securing through chassis:

Screws must be fixed through the chassis sides and into the cabinet sides or packers.

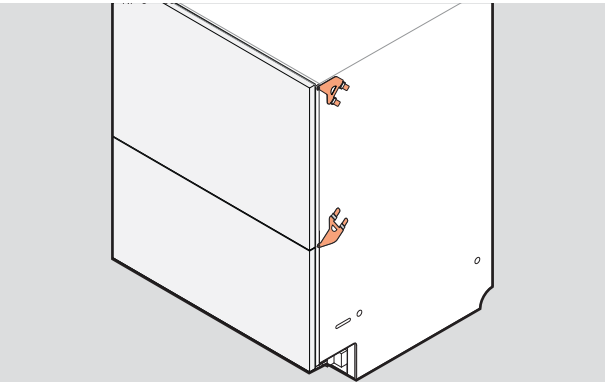

2. Securing through side brackets:

Lower or upper bracket sets can be inserted into the chassis sides and fixed to the edges of the cabinet.

Both sets can be used if needed.

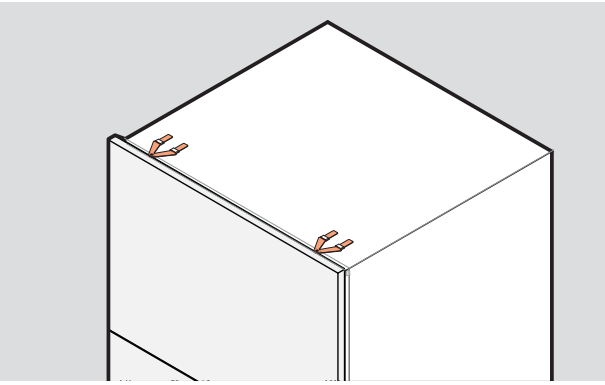

3. Securing through top brackets:

If needed, brackets can be inserted into the chassis top.

These may be used depending on the cabinet or countertop material.

Ensure the screws are flush with the cabinet surface to avoid damaging the drawer panel.

TO ATTACH SIDE BRACKETS

The brackets must lie flat on the chassis with the locking tabs facing out. The locking tabs must be properly inserted through the slots to secure the brackets.

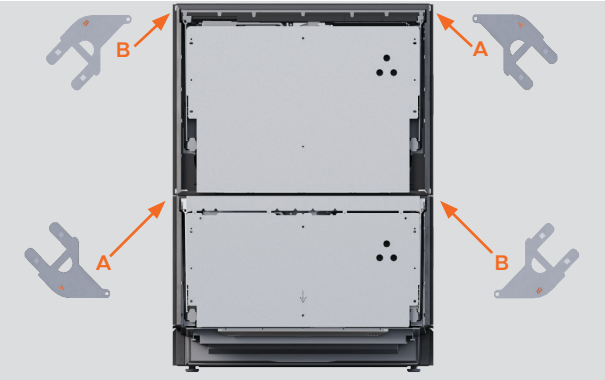

1. Locate the upper and lower bracket sets.

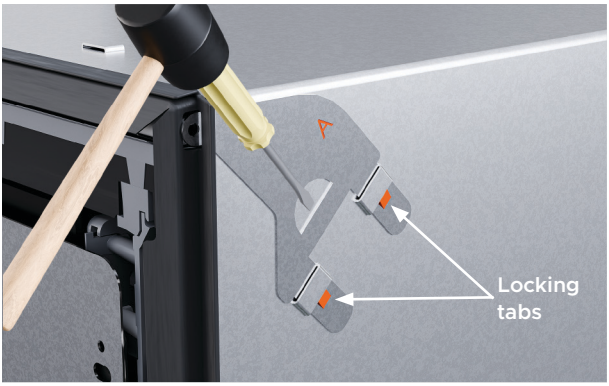

2. If using the upper bracket set, insert into the slots and tap gently with a soft mallet to secure.

Push the screw tab through the gap in the rubber seal.

3. If using the lower bracket set, insert into lower slots and tap gently with a soft mallet to secure.

Push the screw tab through the gap in the rubber seal.

TO ATTACH TOP BRACKETS

Use top brackets if the cabinetry is suitable and the screw heads will be flush to prevent drawer panel damage.

The brackets must lie flat on the chassis with the locking tabs facing out.

1. Place the top brackets into the top tabs.

Push the screw tab through the gap in the rubber seal.

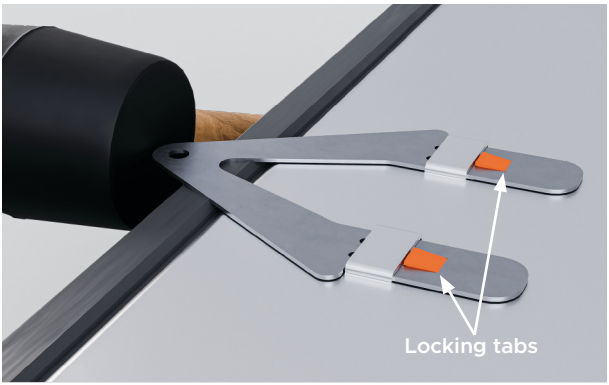

2. If necessary, tap gently with a soft mallet to secure.

ATTACH SPACERS

1. Snap off the four spacers with an adhesive strip.

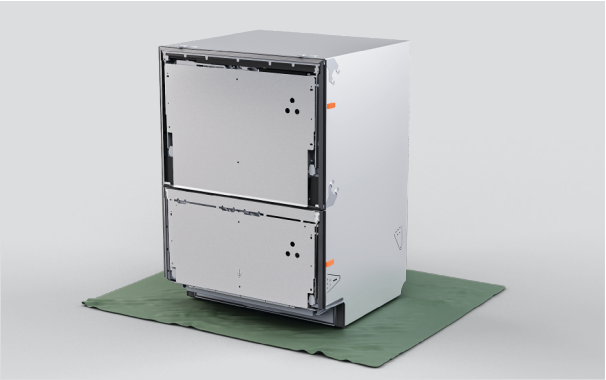

2. Place spacers on each side of the dishwasher between the brackets.

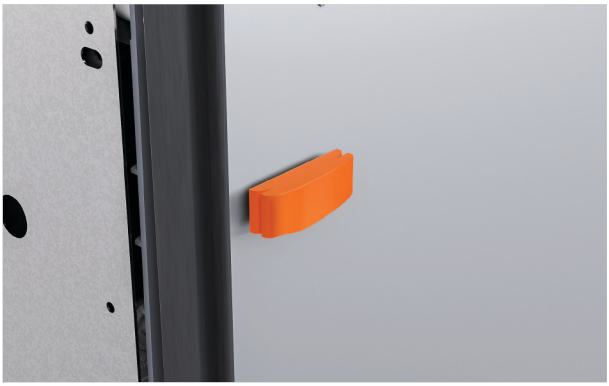

3. If required, a larger spacer segment can be snapped on to adjust the thickness.

ADJUST DISHWASHER HEIGHT

Ensure the drawers are secured with tape. Take care not to bend the feet when tilting the dishwasher. Further adjustments will be made once the dishwasher is inside the cavity.

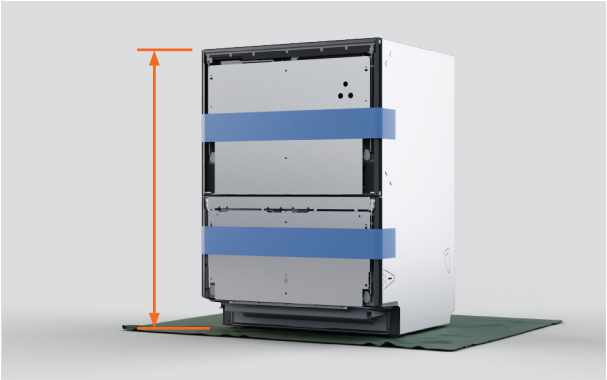

1. Measure the height of the dishwasher from the feet to the top of the chassis.

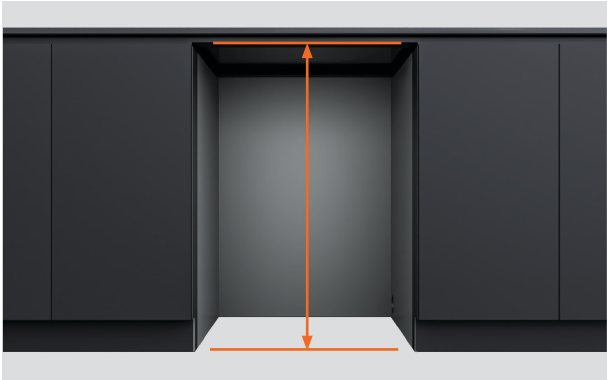

2. Measure the distance from the floor to the underside of the countertop or cavity frame.

3. Adjust the dishwasher height to 3 to 5mm below the cavity height.

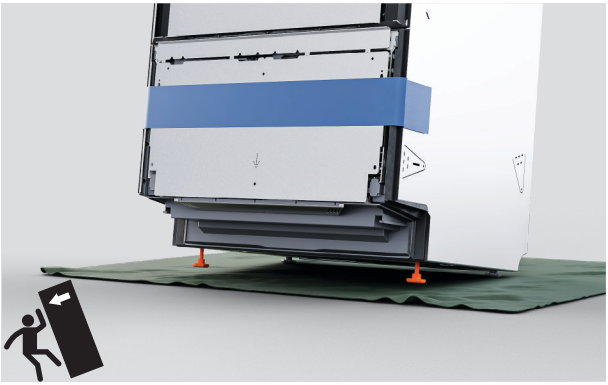

4. Tilt the dishwasher to rest on its back feet and unscrew or tighten the front feet.

5. Tilt the dishwasher to rest on its front feet and unscrew or tighten the back feet.

PUSH INSIDE CAVITY

1. Place hoses and cords through the service holes and into the adjacent cavity.

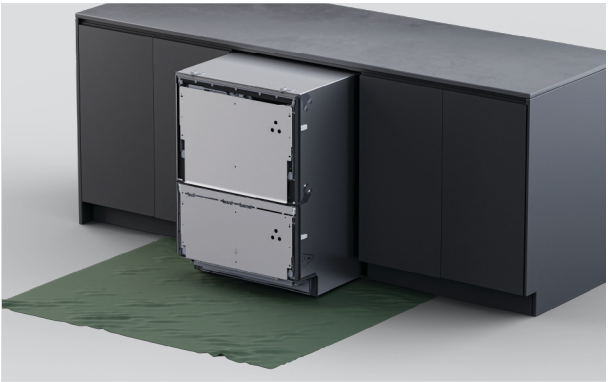

2. Carefully push the product into the cavity, feeding the hoses through the service holes as you go.

Avoid crushing or twisting the hoses.

LEVEL THE DISHWASHER

The minimum gap between the drawer panel and countertop or frame is 2mm.

1. Place the top panel onto the drawer bracket.

Measure the gap between the top of the drawer panel and the countertop or frame for height adjustment.

2. Remove the panel and pull the drawer halfway out to remove the tub.

On each side of the lower drawer, push locking tabs back.

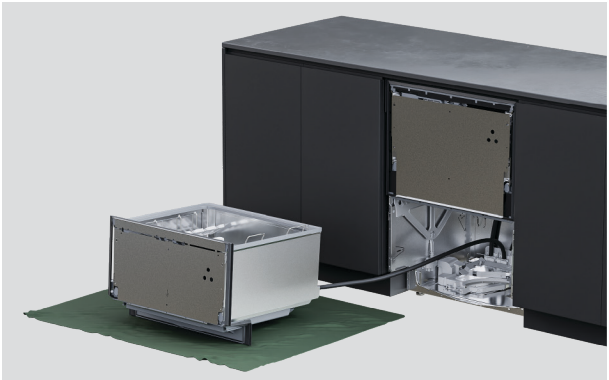

3. Place the drawer on a protected surface to the left of the appliance.

Do not stretch or disconnect the hoses and cords.

4. Use a spanner to adjust the height of each leg.

5. Place the panel onto the bracket and check that the gap is a minimum of 2mm.

Small adjustments can be made once the panel is fitted.

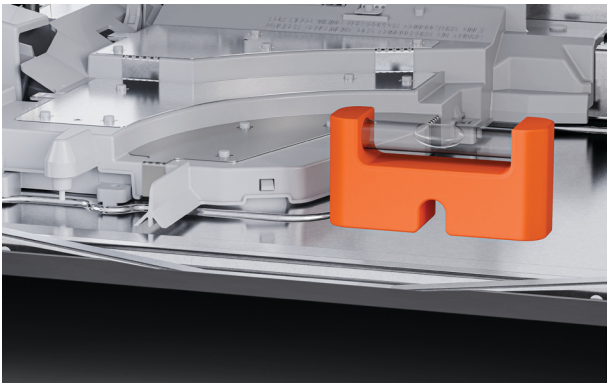

6. Place a level on the flat area of the chassis to check that the dishwasher is level from back to front and left to right.

CUSTOM TOP PANEL: MEASURE PANEL

If panel widths or heights are extended over the minimum dimensions, ensure there is a small gap between the custom panel and any cabinetry behind it.

The drawer must seal fully to prevent moisture escape and condensation, which may damage the custom panel.

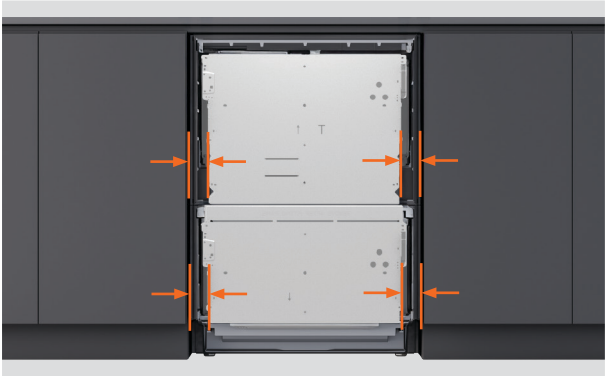

1. Measure the distance from the adjacent cupboard doors to the lower edges of the drawer bracket.

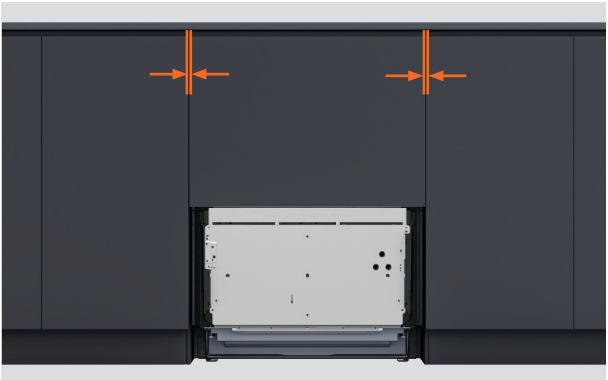

2. Subtract the required gap between the cabinet panels from each measurement.

The minimum required gap to adjacent cabinet doors or drawers is **2mm**.

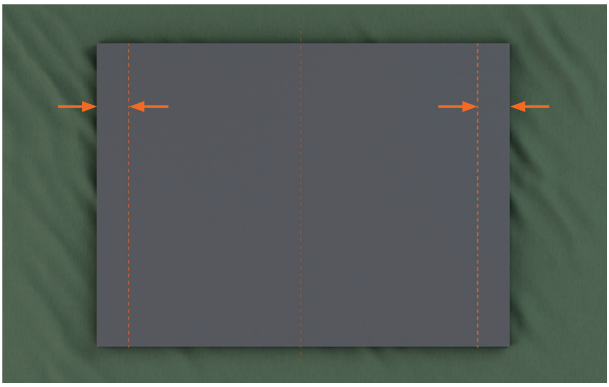

3. Use the final measurements to mark vertical lines on the back of the custom panel.

CUSTOM TOP PANEL: ATTACH TO DRAWER BRACKET

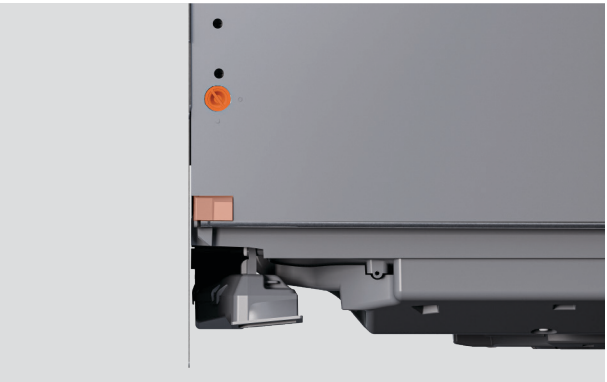

1. On each side of the drawer:

Rotate the drawer bracket pins by a quarter turn. Use pliers to pull the door pin out.

Push the slide clip back.

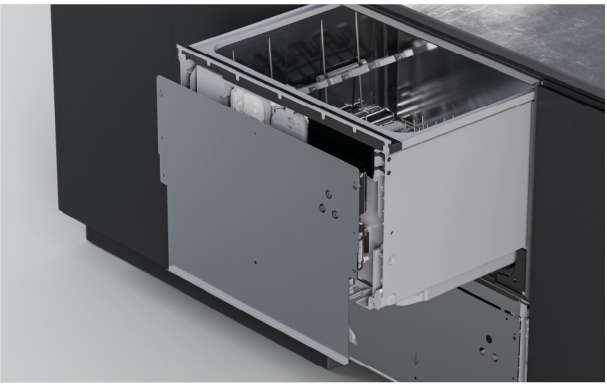

2. Detach the drawer bracket by pulling down firmly and then angling out.

Disconnect the earth wire from the bracket before removing.

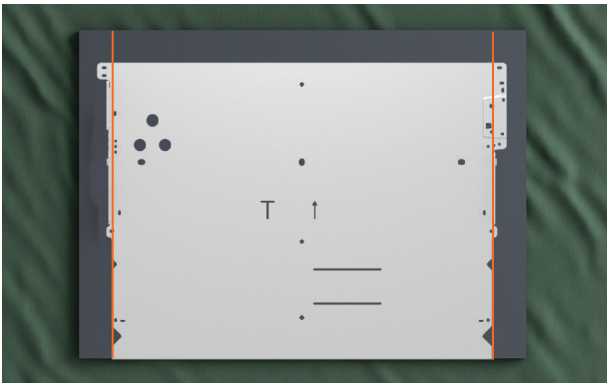

3. Position the drawer bracket on the custom panel between the marked lines.

Ensure that the bottom of the drawer panel rests on the bracket.

CUSTOM TOP PANEL: ATTACH TO DRAWER BRACKET

Supplied screws are 16mm long. Where the panel is less than 18mm thick at any fixing point, use shorter screws (not supplied) to avoid breaking through the face of the panel.

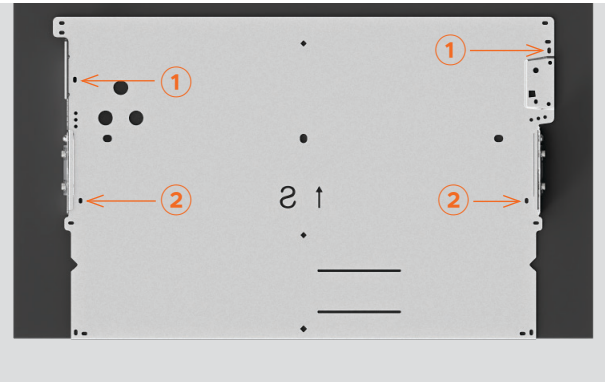

4. Fix screws in slot numbers ① and ② on the bracket.

Pilot holes may be required depending on the panel material.

5. Slot the panel and bracket onto the dishwasher.

Check that the panel is closely aligned with the surrounding cabinets.

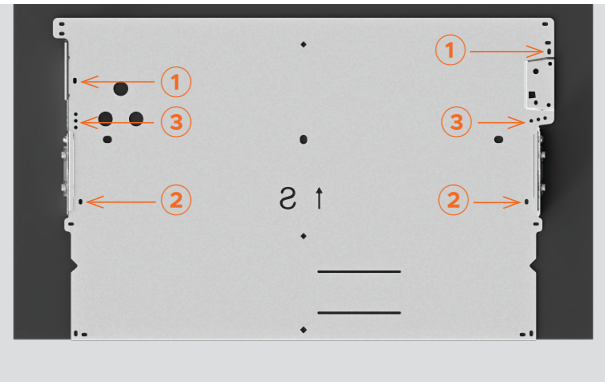

6. Tighten the screws in positions ① and ②.

Add screws on each side in any of the holes marked ③ on the bracket.

At least three screws are required on each side of the drawer bracket.

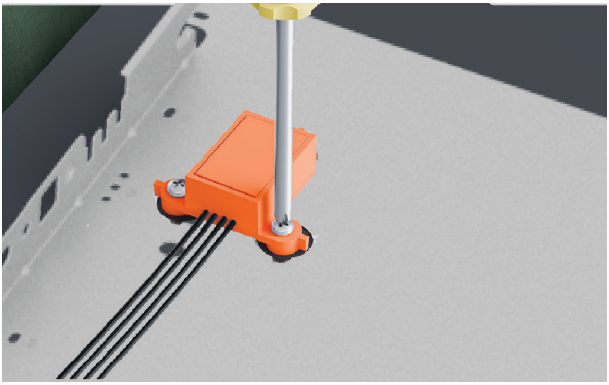

1. Secure knock-to-pause module to the panel using the supplied screws.

2. Check that the module is oriented correctly and fixed securely to ensure proper function.

3. Move the panel to the dishwasher.

Plug the knock-to-pause module into the controller.

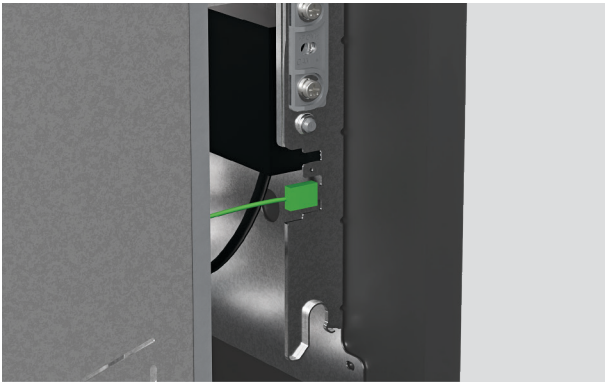

1. ⚠ Attach the earth wire to the drawer bracket to ensure safe use.

2. On each side of the drawer:

Place the panel back onto the dishwasher. Insert the side pins.

Quarter turn the pins to secure.

Pull the slide clip towards the front of the drawer.

CUSTOM BOTTOM PANEL: MEASURE PANEL

The minimum gap to adjacent cabinet doors or drawers is **2mm**. The minimum gap between the dishwasher top and bottom drawers is **8mm** for ventilation.

1. Measure the distance from the adjacent cupboard doors to the edges of the drawer bracket.

2. Subtract the required gap between the cabinet panels from each measurement.

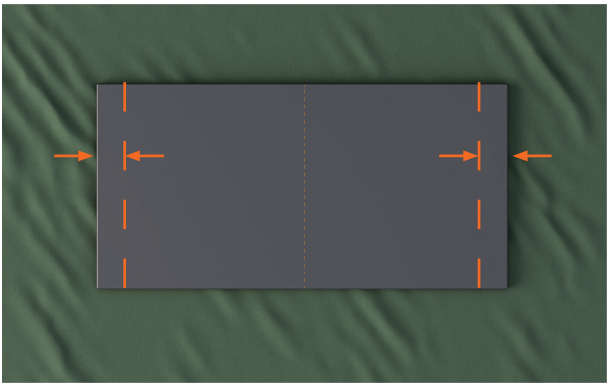

3. Use the final measurements to mark vertical lines on the back of the custom panel.

CUSTOM BOTTOM PANEL: ATTACH TO DRAWER BRACKET

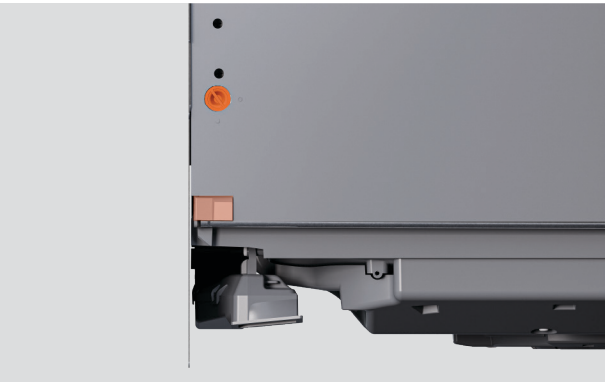

1. On each side of the drawer:

Rotate the drawer bracket pins by a quarter turn. Use pliers to pull the door pin out.

Push the slide clip back.

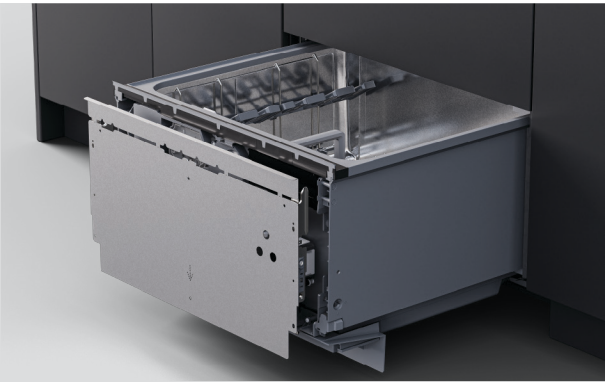

2. Detach the drawer bracket by pulling down firmly and then angling out.

Disconnect the earth wire from the bracket before removing.

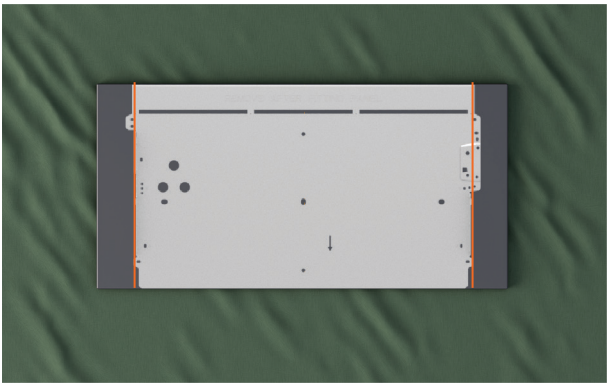

3. Position the drawer bracket on the custom panel between the marked lines.

Ensure that the top of the drawer bracket rests on the panel edge.

CUSTOM BOTTOM PANEL: ATTACH TO DRAWER BRACKET

Supplied screws are 16mm long. Where the panel is less than 18mm thick at any fixing point, use shorter screws (not supplied) to avoid breaking through the face of the panel.

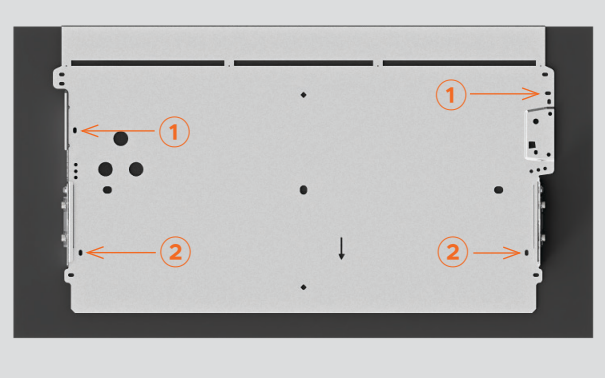

4. Fix screws in slot numbers ① and ② on the bracket.

Pilot holes may be required depending on the panel material.

5. Slot the panel and bracket onto the dishwasher.

Check that the drawer can open and close.

An 8mm ventilation gap is required between the upper and lower drawers.

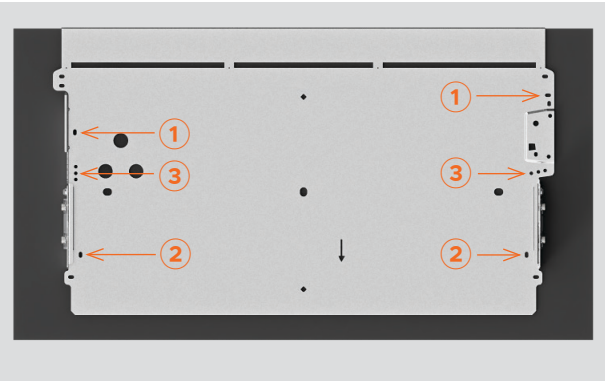

6. Tighten the screws in positions ① and ②.

Add screws on each side in any of the holes marked ③ on the bracket.

Bend the top of the bracket back and forth until it snaps off.

At least three screws are required on each side of the drawer bracket.

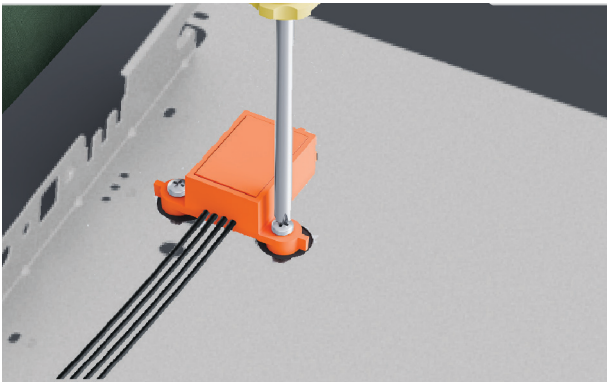

1. Secure knock-to-pause module to the panel using the supplied screws.

2. Check that the module is oriented correctly and fixed securely to ensure proper function.

3. Move the panel to the dishwasher.

Plug the knock-to-pause module into the controller.

SECURE BOTTOM PANEL

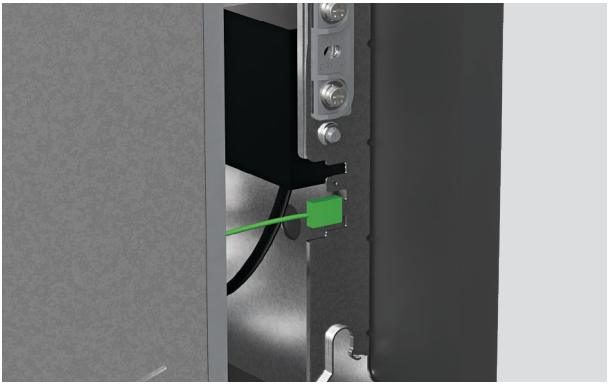

1. ⚠ Attach the earth wire to the drawer bracket to ensure safe use.

2. On each side of the drawer:

Place the panel back onto the dishwasher. Insert the side pins.

Quarter turn the pins to secure.

Pull the slide clip towards the front of the drawer.

ADJUST PANEL TILT

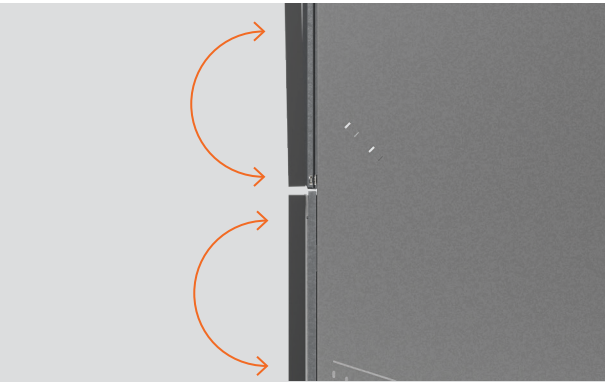

Adjust the panel tilt so the top and bottom panels align, then reposition the dishwasher in the cavity if needed.

1. Adjust panel tilt

Insert a crosshead screwdriver into the lower hole above the bracket pin and turn to adjust.

Repeat on the other side of the drawer if required.

SECURE THROUGH CHASSIS SLOT

Slots in the chassis sides allow screws to be temporarily fixed and the dishwasher to be adjusted within the cavity. Panel alignment can then be checked before final fixing.

1. Pull the drawer halfway out to remove the tub.

On each side of the tub, push locking tabs back.

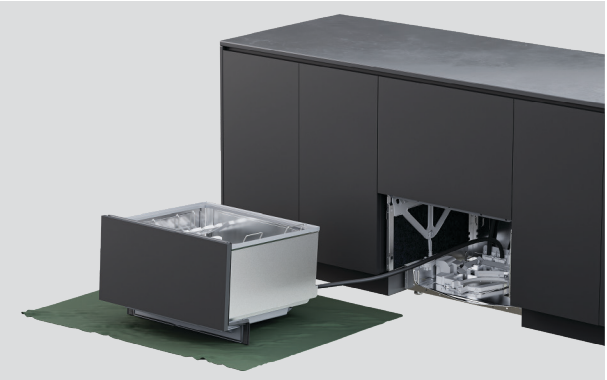

2. Place the drawer on a protected surface to the left of the appliance.

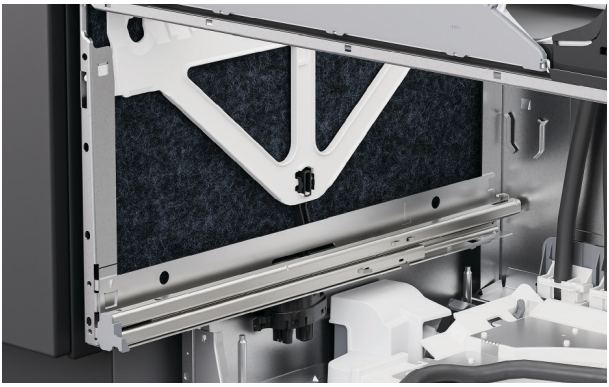

3. On the chassis sides, lift the insulation.

4. Fit a screw in each chassis slot to secure to the cabinet.

Partially tighten screws ensuring adjustments can be made.

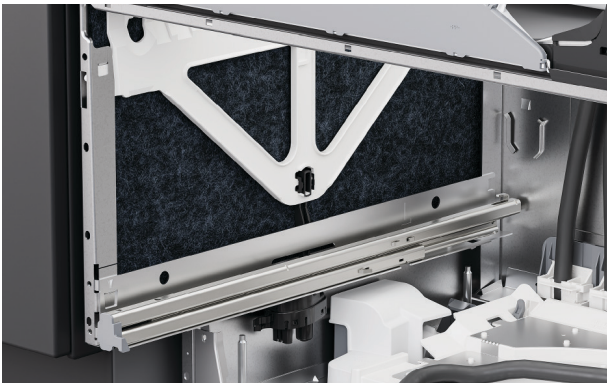

5. Refit insulation ensuring it is positioned correctly and will not obstruct the drawer runners.

6. To replace the bottom tub, pull the drawer runners halfway out.

Place the tub onto the runners.

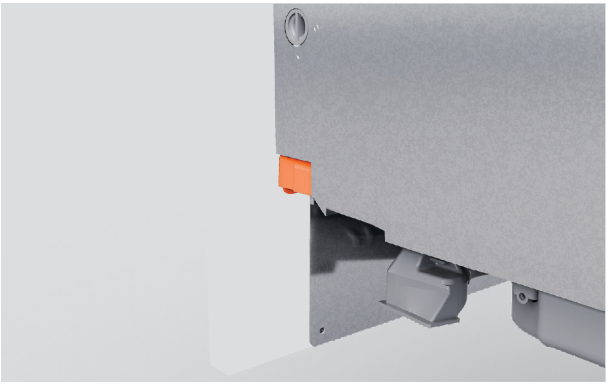

7. Pull locking tabs forward and click the drawer into place.

Ensure hoses are not crushed or twisted when closing the drawer.

8. Check that the panel is aligned with the surrounding cabinetry.

Adjust panels if required.

ADJUST PANEL ALIGNMENT VERTICAL AND HORIZONTAL

Adjust up and down (vertical)

Insert a screwdriver into the second hole above the bracket pin and turn to adjust.

Repeat on the other side of the drawer if required.

Adjust side to side (horizontal)

On the left hand side of the drawer, insert a screwdriver into the third hole above the bracket pin and turn to adjust.

Turn clockwise to move panel to the right and anti-clockwise to move panel to the left.

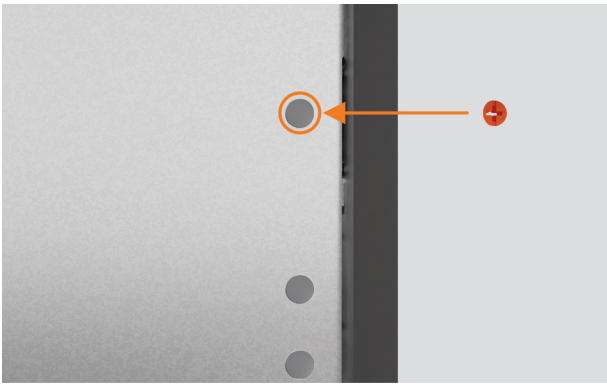

When all adjustments are final and the dishwasher is installed, locate the screw caps and insert into the adjustment holes.

1. Pull the drawer halfway out to remove the tub.

On each side of the tub, push locking tabs back.

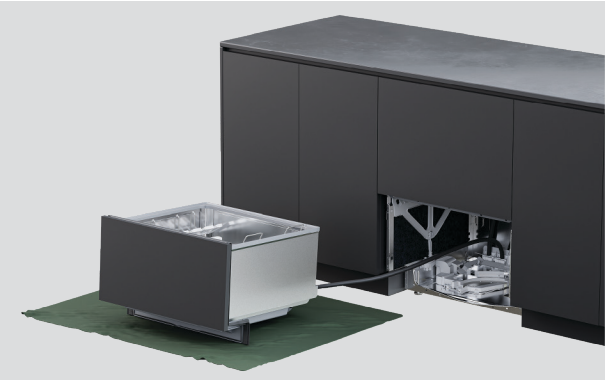

2. Place the drawer on a protected surface to the left of the appliance.

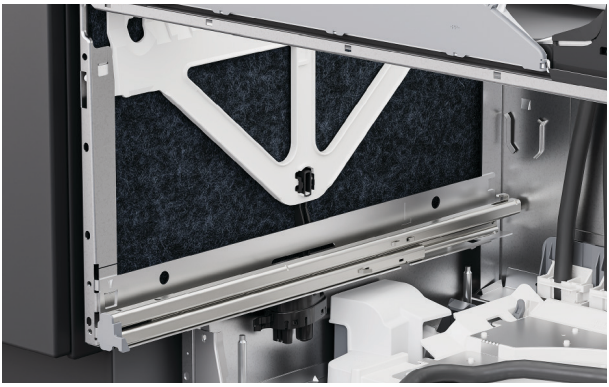

3. On the chassis sides, lift the insulation.

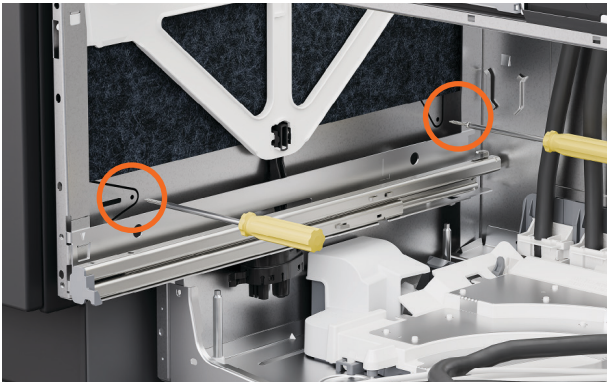

4. Insert screws through the two holes on each side of the chassis.

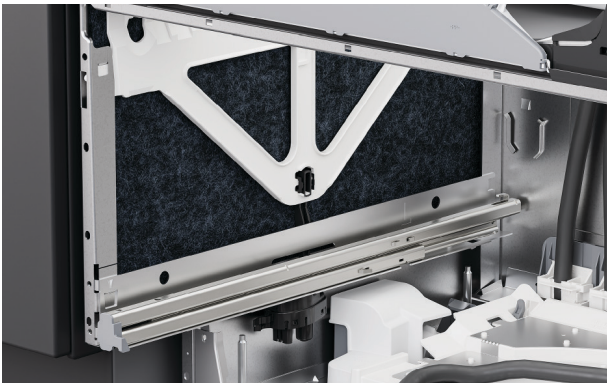

5. Ensure insulation is repositioned correctly and will not obstruct the drawer runners.

6. Place the tub back onto the runners, pull locking tabs forward and click drawer into place.

SECURE USING BRACKETS

1. If using brackets, partially open the top drawer.

Lift the rubber seal and remove the left and right screw covers from the trim.

2. Fix side brackets using the supplied screws and replace the screw covers.

3. If top brackets are inserted, fix using the supplied screws.

Ensure the screw head is flush and clear of the top of the drawer panel when closed to avoid damage.

CUSTOM TOE KICK - 40MM - 102MM DEPTH

A **12mm** clearance gap is required between the bottom of the toe kick and the floor.

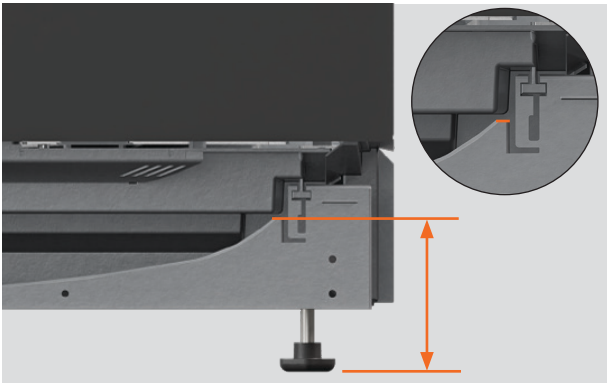

1. To measure the overall height of the toe kick panel, slide the mounting bracket onto the T rails.

Measure the distance from the top of the curve to the floor and subtract 12mm for clearance.

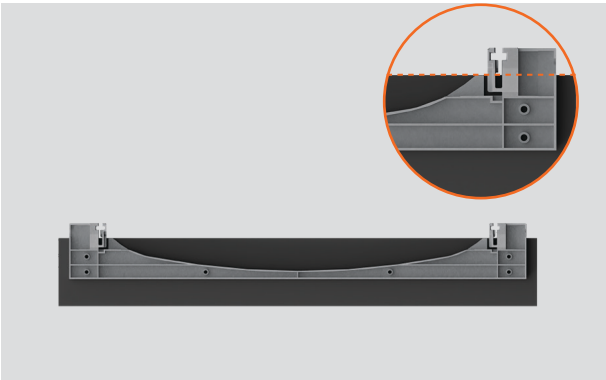

2. Align the top edge of the custom panel to the top of the curve on the mounting bracket.

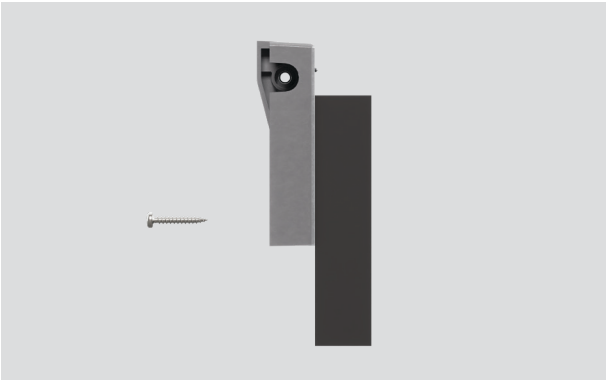

3. Drill pilot holes through the fixing points.

Screw the mounting bracket to the toe kick using the provided screws.

CUSTOM TOE KICK - 40MM DEPTH

A **12mm** clearance gap is required between the bottom of the toe kick and the floor.

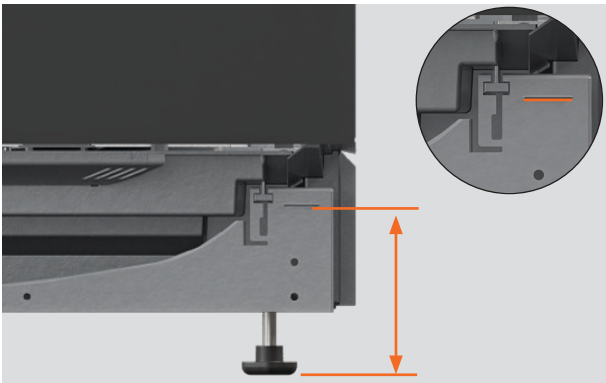

1. To measure the overall height of the toe kick panel, slide the mounting bracket onto the T rails.

Measure the distance from the bottom of the rib to the floor and subtract 12mm for clearance.

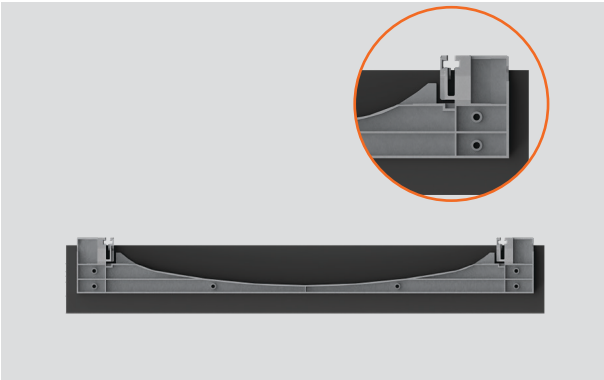

2. Align the top edge of the custom panel to the bottom of the rib on the mounting bracket.

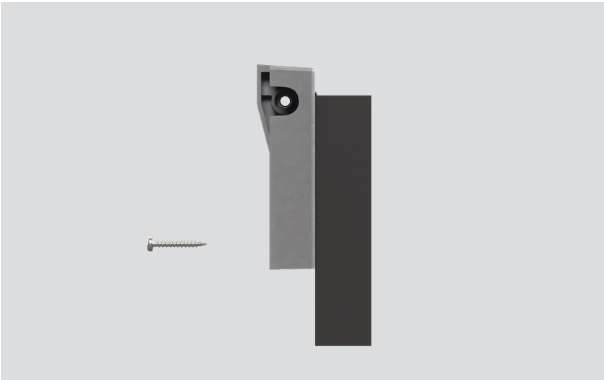

3. Drill pilot holes through the fixing points.

Screw the mounting bracket to the toe kick using the provided screws.

1. Slide mounting bracket along T rails until it is in position.

Secure the mounting bracket to the T rails. Do not over tighten.

DRAIN CONNECTION OPTIONS

Water pressure DD60D4HI2U1: Maximum 1 MPa (145 psi), min. 0.1 MPa (14.5 psi)

Water connection: 3/4” BSP (GB20) to suit flat washer, recommended temperature: cold 20°C

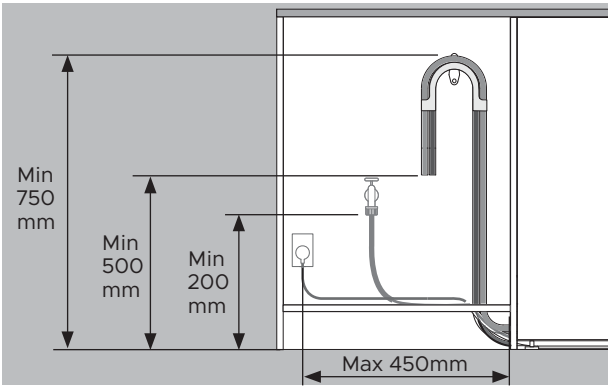

Distances are the same for all installs.

- Floor to support top - min 750mm.
- Floor to drain hose end - min 500mm.
- Floor to water inlet - min 200mm.
- Cabinet side to center of electrical outlet - max 450mm.

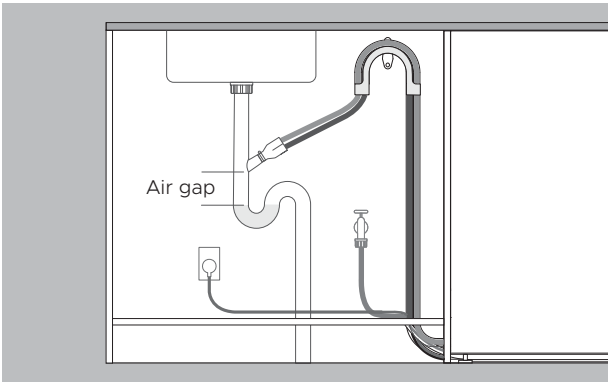

Drainage routed to spigot

- Spigot must be higher than standing water with an air gap between to avoid drainage issues.
- Remove excess drain hose to prevent hose drooping below the spigot height.

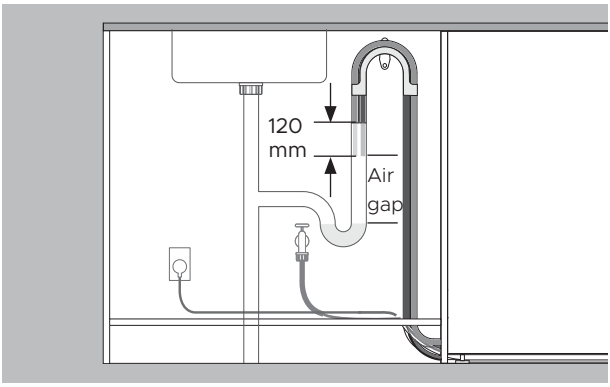

Drainage routed to standpipe

- Drain hose must be higher than standing water with an air gap between to avoid drainage issues.
- Remove excess drain hose.
- Hoses must not extend into standpipe more than 120mm.

INSTALL DRAIN

Ensure the drain hose support is properly installed and the hose is correctly threaded through to prevent damage and drainage issues.

The dishwasher must not be drained into standing water.

If the drain hoses supplied are not long enough to reach your services, a 3.6m drain hose extension kit is available at fisherpaykel.com

1. Install the drain hose support as close to the countertop as possible, with a minimum distance of 750mm from the floor.

Thread the hoses through the support.

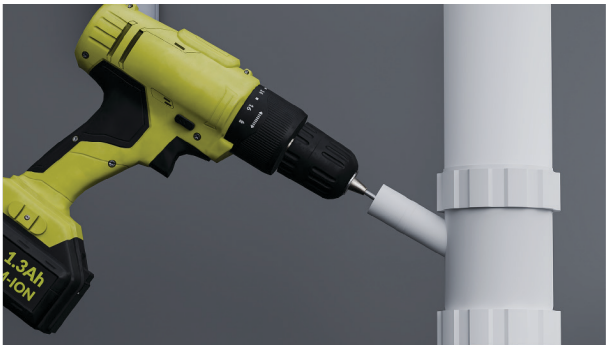

2. For connection to waste tee:

To avoid shavings entering the plumbing system, remove the waste tee before drilling.

Unplug or drill out the waste tee minimum 13mm in diameter before securing the joiner.

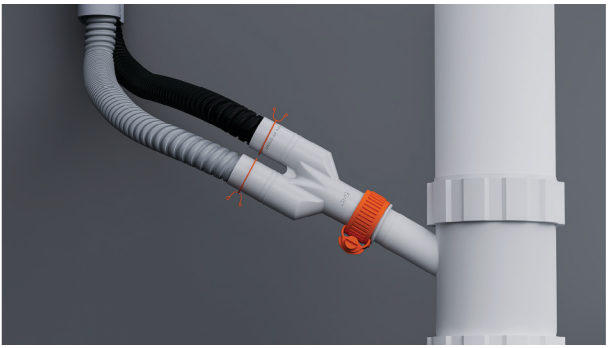

3. Thread the wire clips onto the hoses.

Fit the hoses to the supplied hose joiner and secure using the wire clips provided.

Ensure each hose is routed straight to the joiner to avoid kinks that can restrict drainage.

4. For connection to standpipe:

Pull both drain hoses through the drain hose support and rest in standpipe.

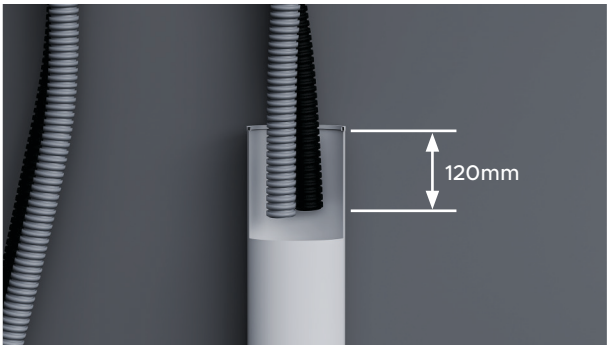

5. Ensure the hoses do not extend more than 120mm into the standpipe to prevent wastewater siphoning back into the tub.

Hoses can be trimmed if necessary.

CONNECT WATER INLET

Do not turn water supply on before power has been connected. The dishwasher must be powered on for flood protection to be enabled.

Isolation taps are required to allow the water supply to be shut off.

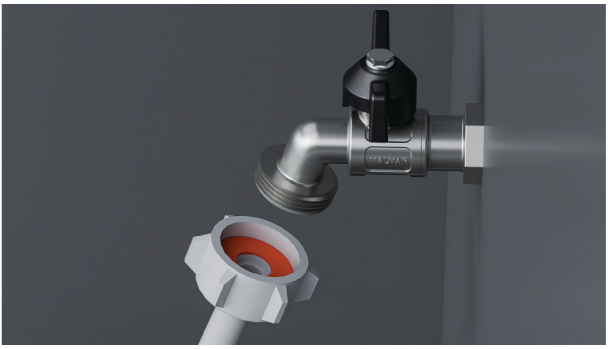

1. Check that the supplied rubber washer is inserted into the coupling.

2. Connect the inlet hose to the tap.

Ensure the inlet hose is not kinked and the tap is not pulled or under pressure.

Do not shorten the inlet hose.

3. Hand-tighten into place. Using a spanner or pliers, turn a further 180° to secure. Avoid over-tightening.

CONNECT POWER

Electrical requirements: 220 - 240V, 50-60Hz. Minimum 9A

The power plug should be accessible after installation for maintenance.

1. Connect power.

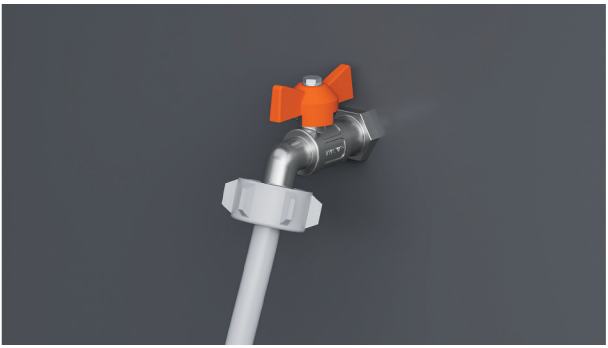

2. Check the water connections.

Turn on the water supply and check for leaks.

The dishwasher must be powered on for flood protection to be enabled.

If power is to be disconnected, ensure water supply is turned off.

INSTALLER CHECKLIST

Installation

- ☐ If power is disconnected, ensure water supply is turned off to prevent flooding.
- ☐ Check all parts are installed correctly and are secure.
- ☐ Ensure all clearance gaps have been maintained.
- ☐ Ensure dishwasher is secure and drawer opens and closes freely with no resistance.
- ☐ Ensure panels are fitted correctly to the dishwasher.
- ☐ Ensure any packaging or tape securing the racks and spray arm is removed.
- ☐ Check the spray arm is in place, mounted correctly and rotates freely.
- ☐ Ensure the knock-to-pause modules are fitted securely and operating correctly.
- ☐ Ensure that the sealing tape has been applied and is free of creases, folds, or air bubbles.

Plumbing

- ☐ Ensure any knock-outs or plugs in drain connection have been drilled out and drain connection has been made.
- ☐ The drain hose joiner must not support the weight of excess hose material. Keep drain hose as fully extended as possible to prevent sagging. Any excess length of drain hose should be kept on the dishwasher side of the high loop.
- ☐ Ensure the supplied rubber washer is fitted to the inlet hose and tightened securely.
- ☐ If connecting the drain hose to the sink trap, ensure the high loop is a minimum 150mm higher than the drain hose joiner.
- ☐ Water softener models: adjust the water softener setting from the default setting to suit the water hardness of the area. Refer to your user guide.
- ☐ Ensure water supply is turned off until power is connected and turned on. The dishwasher must be powered on for the flood protection feature to be enabled.

Electrical

- ☐ Ensure all electrical tests have been conducted in accordance with local regulations.

Test operation

- ☐ Turn on the power and water supplies, then open the drawer. You should hear a beep and see a program indicator light up on the control panel.
- ☐ Add three cups of water into the drawer.
- ☐ Navigate to RINSE and start the program.
- ☐ Check the knock-to-pause function.
- ☐ Repeat for the other drawer.
- ☐ After the Rinse cycle has finished, ensure the dishwasher has run and drained correctly.
- ☐ Check the water supply has been shut off correctly.
- ☐ Check drainage connections for leaks.
- ☐ **If site is left without power after installation is complete, ensure water supply is turned off to prevent flooding.**

Complete and keep for safe reference:

Model _____

Serial no. _____

Purchase date _____

Purchaser _____

Dealer address _____

Installer's name _____

Installer's signature _____

Installation company _____

Installation date _____

FISHERPAYKEL.COM

© Fisher & Paykel Appliances 2026. All rights reserved.

The models shown in this guide may not be available in all markets and are subject to change at any time.

The product specifications in this guide apply to the specific products and models described at the date of issue. Under our policy of continuous product improvement, these specifications may change at any time.

For current details about model and specification availability in your country, please go to our website or contact your local Fisher & Paykel dealer.

433800A 09.26