FISHER & PAYKEL

WASHER DRYER

WD9060J2

INSTALLATION GUIDE

AU

COMPONENTS REQUIRED

TOOLS

Not supplied

- ☐ Box cutter
- ☐ Phillips screwdriver
- ☐ Level
- ☐ Spanner

PARTS

Supplied and required

- ☐ 1x Water inlet hose
- ☐ 4x Blanking plugs
- ☐ 4x Foam strips
- ☐ 1x Drain hose guide

PRODUCT SPECIFICATIONS

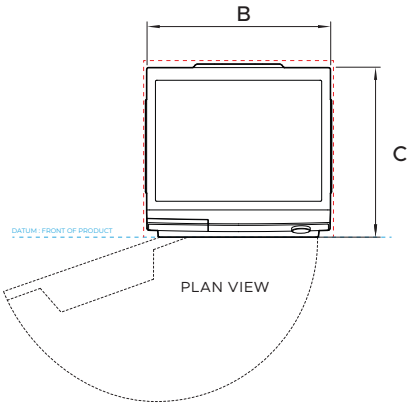

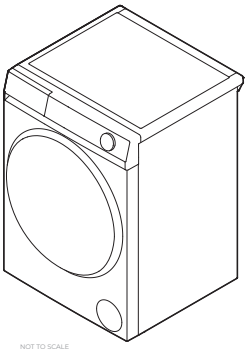

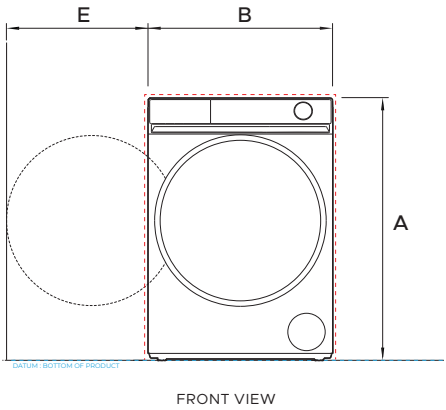

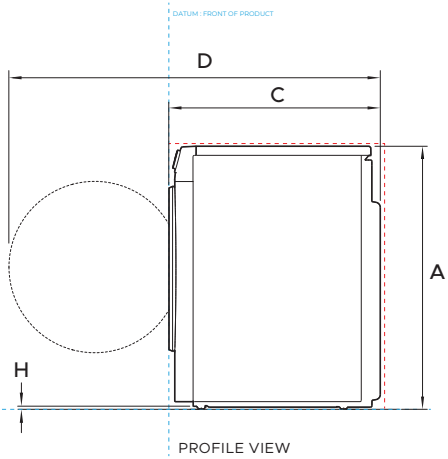

PRODUCT DIMENSIONS		MM
A	Overall height	850 - 865
B	Overall width	595
C	Overall depth*	559
D	Depth with door open	1062
E	Door clearance to adjacent wall	240
F	Height of adjustable feet	15

CAVITY DIMENSIONS	MM
Minimum inside height of cavity	865
Minimum inside width of cavity	625
Minimum inside depth of cavity – Proud	564
Minimum inside depth of cavity – Flush	589

PRODUCT SPECIFICATIONS

For full product, cabinetry and service specifications, refer to the Planning Guide. To access the Planning Guide, scan the QR code or visit fisherpaykel.com/specify. Search by appliance type, product name or model code.

ELECTRICAL	
Service (A)	10
Supply (Hz)	50
Voltage (V)	220 - 240
Max rated power (W)	2000
Outlet	3-pin earthing type

PLUMBING	
Supply	Cold inlet
Pressure	0.05 < P < 1 MPa

Fisherpaykel.com/specify

1. Ensure cabinetry and servicing specifications have been met and clearances have been considered.

Refer to planning guide for details.



2. Ensure alcove is level and clear, and a finished return has been created if required.



3. Ensure power will remain accessible following install to allow access for any future product maintenance.

Service holes should be smooth with grommets installed where required.

UNPACK PRODUCT

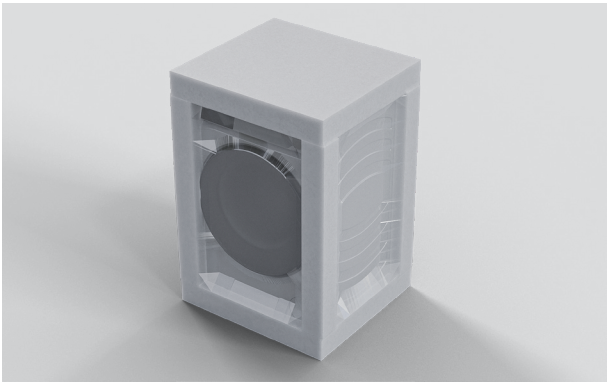

1. Remove the packaging.



2. Remove any accessories and dispose of packaging responsibly.



3. Protect flooring before positioning washer dryer as close to the installation location as possible, ensuring enough working room is left available.

REMOVE TRANSIT BOLTS



1. Using a spanner, remove all four transit bolts from the back of the washer dryer.



2. Pull the rubber grommets and spacers outwards to remove.



3. Cover the transit bolt holes using the supplied plugs.

LEVEL



1. Adjust the feet using a spanner until the washer dryer is level front to back and corner to corner.



2. Once level, move the washer dryer into its final position allowing for required clearances.

Recheck washer dryer is level before removing from the alcove.

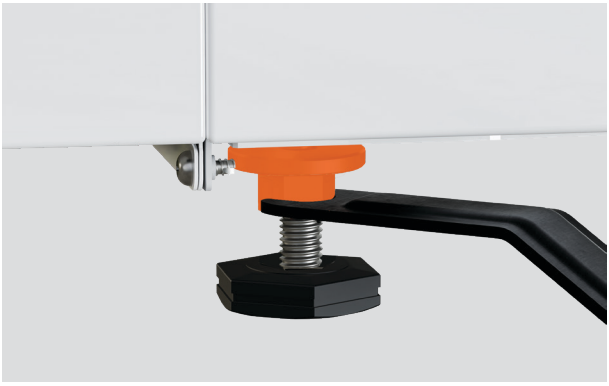

3. Remove the washer dryer from the alcove and tighten locking nuts.

CONNECT CABLES AND HOSES



1. Connect the angled end of hose to the water inlet on the washer dryer.



2. Route the power cables and hoses through service holes.

Ensure power will remain accessible following install to allow access for any future product maintenance.



3. Install the drain hose guide to the back wall.

Guide should be installed between 600-1000 mm up from floor.

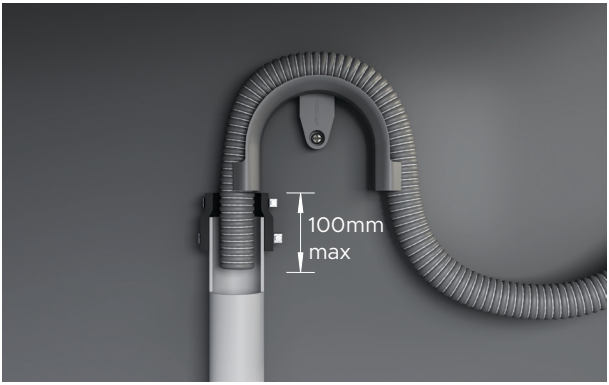

4. Standpipe Installations:

Route the drain hose through the guide and place into the standpipe.

Ensure a maximum of 100mm of the hose rests in the standpipe.

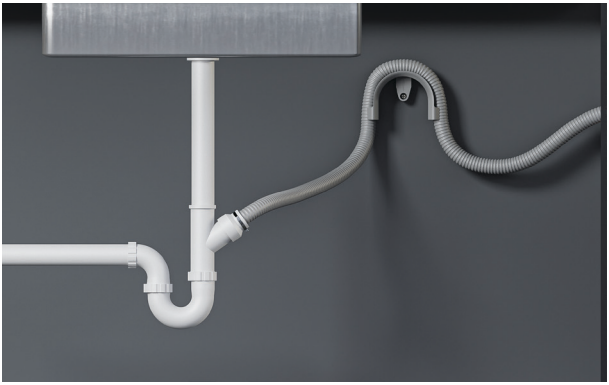

5. Spigot Installations:

Drill out blanking insert from the spigot.

Route the drain hose through the guide and place into the spigot. Secure using a hose clamp.

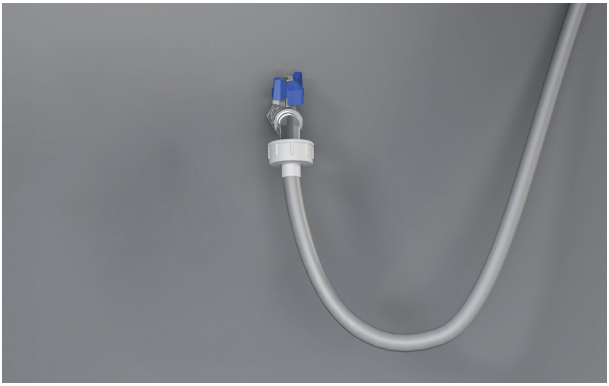

6. Connect hose to tap before turning on. Check for leaks at all connection points.

If possible, recheck for leaks 24 hours after installation.



7. Connect the power cable and check washer dryer is powered on and connected.



1. Push washer dryer into the alcove.

Take care not to damage hoses or power cord.



2. Check alignment and ensure required clearances are maintained. Adjust as required.



3. Before using washer dryer run a first cycle to ensure there are no leaks, that the product is level and water is turned on.

INSTALLER CHECKLIST

TO BE COMPLETED BY THE INSTALLER.

- ☐ Have the packaging and transit bolts and rods been removed?
- ☐ Is the washer dryer correctly levelled, feet are extended and cabinet corners are clear off the floor?
- ☐ Is the drain hose threaded through the hose guide 'U bend' and hooked into your standpipe or tub, or attached to a spigot?
- ☐ Is the cold hose connected to the cold valve marked 'C'?
- ☐ Have the taps been turned on?
- ☐ Has the power cord been connected to an appropriate power supply and the power turned on?
- ☐ Have you preformed a test cycle?

FISHERPAYKEL.COM

© Fisher & Paykel Appliances 2026. All rights reserved.

The models shown in this guide may not be available in all markets and are subject to change at any time.

The product specifications in this guide apply to the specific products and models described at the date of issue. Under our policy of continuous product improvement, these specifications may change at any time.

For current details about model and specification availability in your country, please go to our website or contact your local Fisher & Paykel dealer.

433486A 06.26