FISHER & PAYKEL

COMPANION COFFEE MAKER

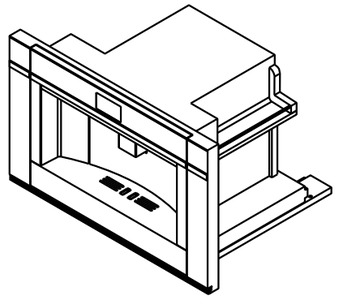

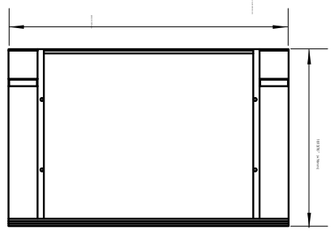

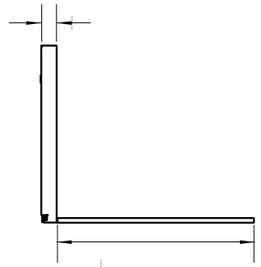

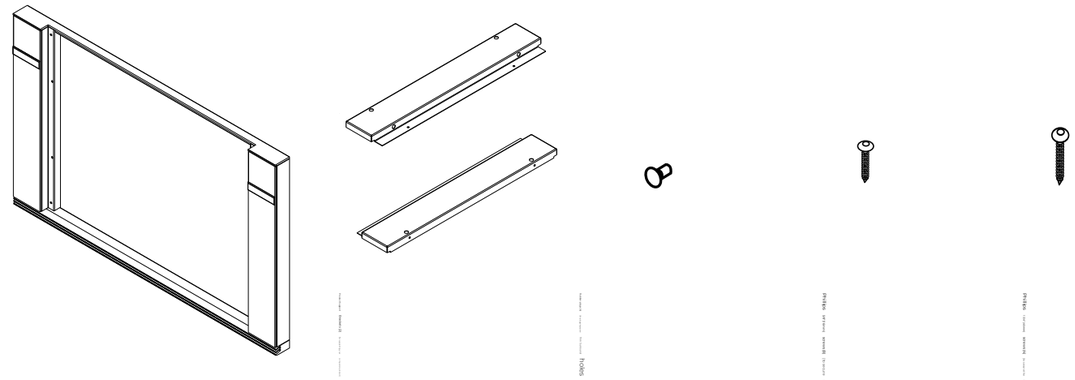

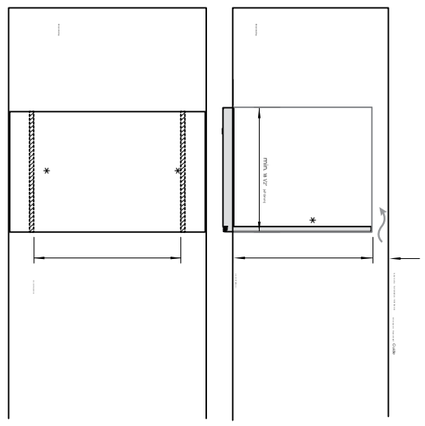

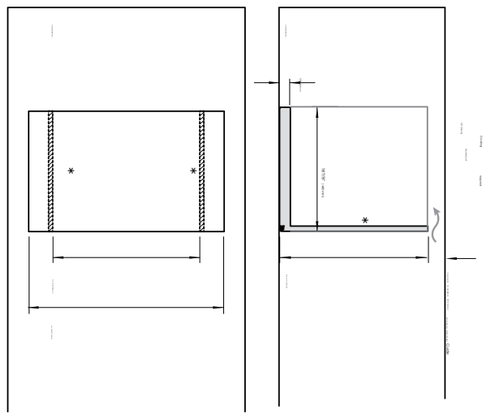

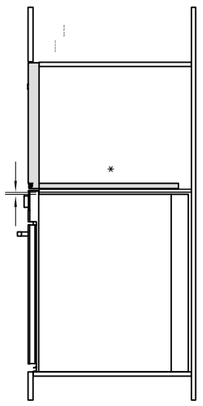

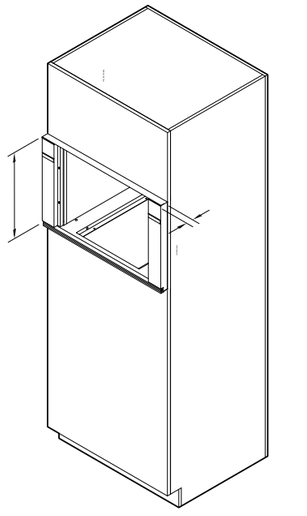

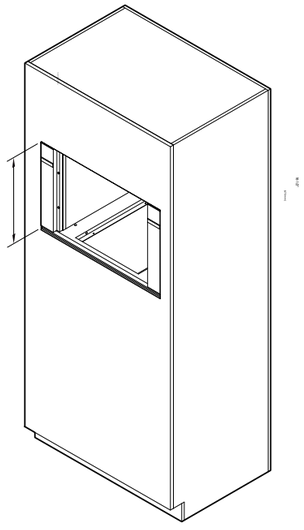

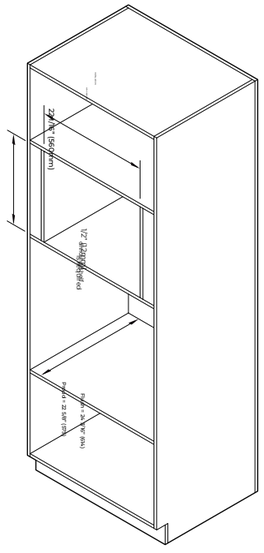

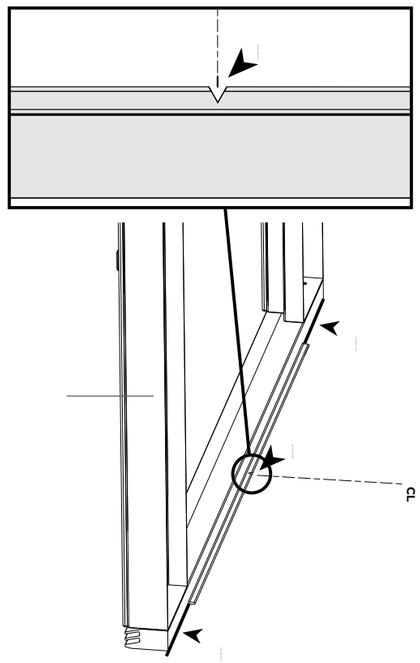

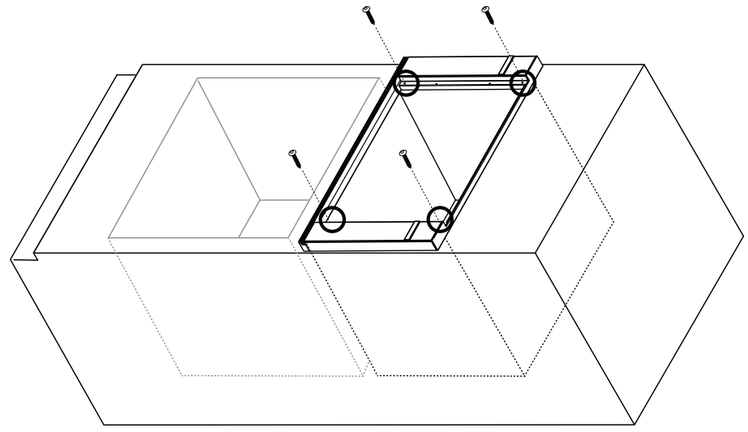

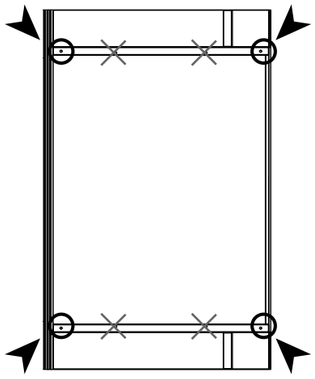

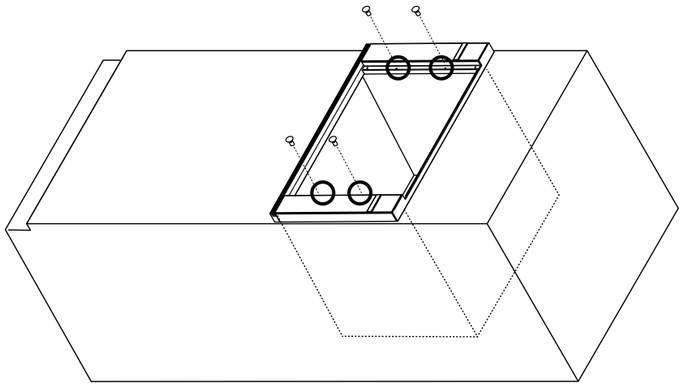

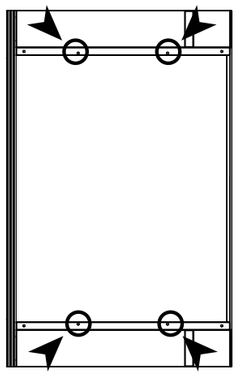
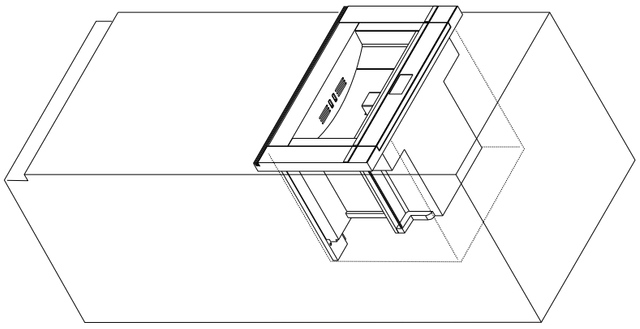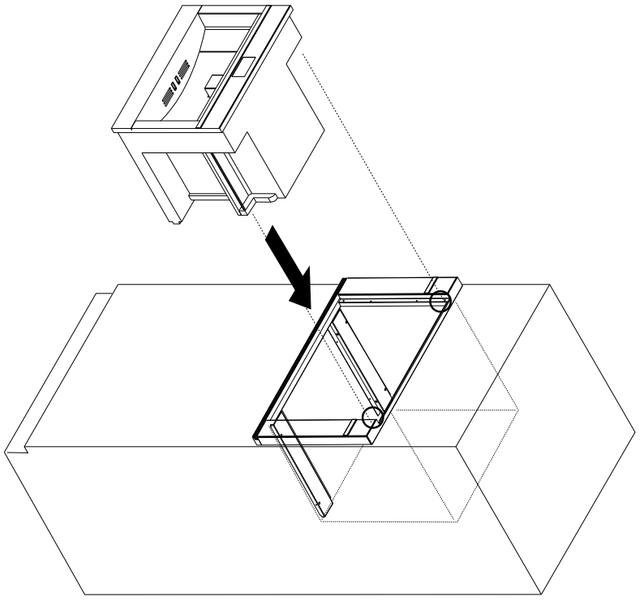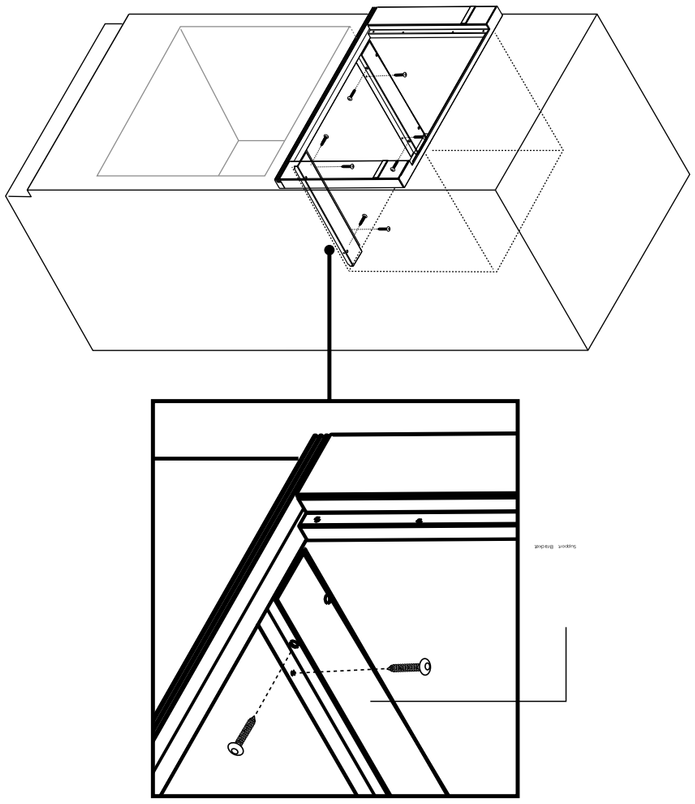
x4