VACUUM SEAL DRAWER
CARE AND MAINTENANCE

Get to know your appliance	3
Cleaning & maintaining the drawer	4
Replacing the sealing bar	5
Replacing the sealing pad	6
Replacing the lid gasket	7
Dehumidifying the vacuum pump	8
Troubleshooting	9

FISHER & PAYKEL

CN

VACUUM SEAL DRAWER

VB60SMB3, VB60SCX3

Product overview

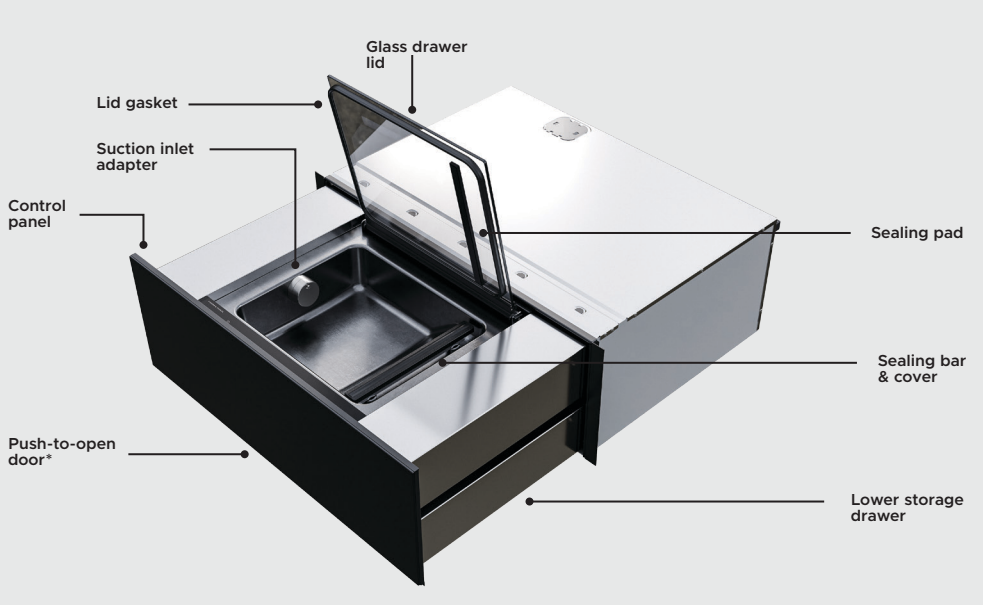

Not shown: vacuum bags, external vacuuming kit (adapter, stopper and tube).

Bags and accessories can be stored in the lower storage drawer. To access, close the upper compartment.**

*Not available on professional models.

**76cm models only.

Control panel

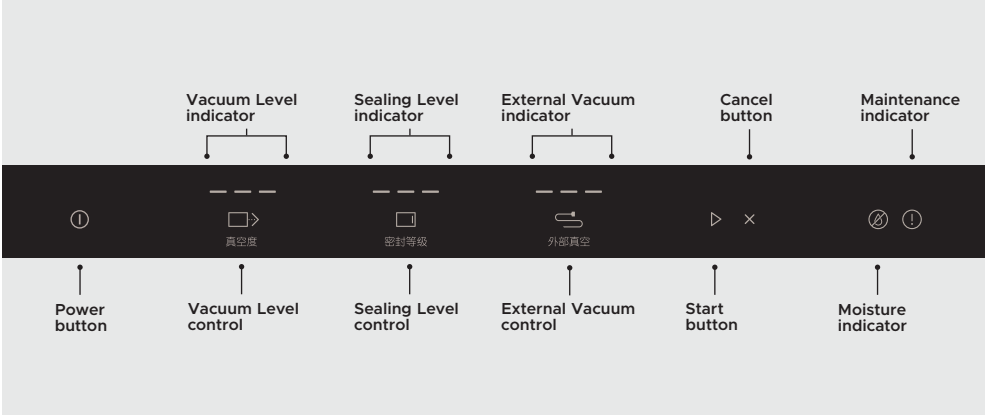

Key steps to maintain your vacuum drawer

- Ensure the drawer is turned off and allow to cool before cleaning.
- Clean surfaces with a damp cloth, and dry them with a lint-free cloth.
- Clean after every use.
- Wipe up spills immediately.

We do not recommend:

- Scouring pads.
- Stainless steel cleaners or polishes.
- Abrasive, acidic, alkaline or solvent cleaning products.
- Steam or high pressure cleaners.

Maintenance indicator:

- The maintenance indicator will light up if the drawer cannot achieve the required pressure to vacuum properly.
- Check and clean the sealing pad, sealing bar and lid gasket and replace if damaged or worn.

Drawer front

Use a soft, damp cloth and mild detergent and dry immediately with a soft cloth. For stainless steel models, rub in the direction of the polish lines when cleaning the door.

Inside the drawer

Use a soft, damp cloth and mild detergent to clean inside the drawer then dry with a soft cloth. Do not allow spills to sit in the drawer or to spill over the sides. You can remove the sealing bar to make it easier to clean inside the drawer.

Glass drawer lid and lid gasket

Clean the drawer lid and gasket a soft, damp cloth then dry with a soft cloth. Do not use detergent on the gasket.

Sealing bar and cover

Remove the sealing bar and cover to clean. Clean with a soft, damp cloth and mild detergent then dry with a soft cloth.

Ensure the sealing bar and cover are correctly back in place after cleaning, using the two locating pins in the drawer to position.

External vacuuming parts

Clean the external vacuuming parts (adapter, stopper and tube) with hot water and mild detergent then dry with a soft cloth.

REPLACING THE SEALING BAR

Replace the sealing bar if it is worn or damaged. The sealing bar is located inside the drawer.

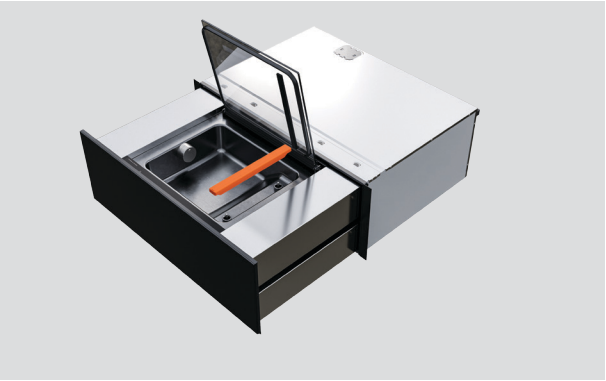

1. Remove the sealing bar and cover.

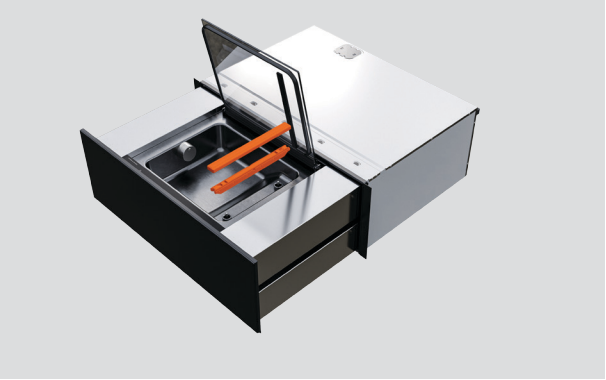

2. Separate the sealing bar from the cover and replace with the new sealing bar.



3. Replace the sealing bar and cover back in the drawer, using the two locating pins to position.

REPLACING THE SEALING PAD

Replace the sealing pad if it is worn or damaged. The sealing pad is located on the underside of the glass drawer lid.

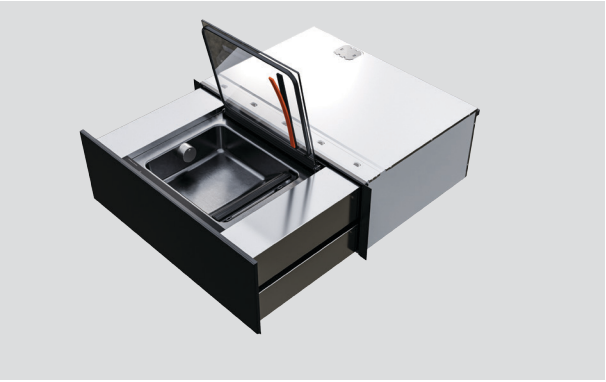

1. Remove the worn or damaged sealing pad from it's holder and replace with the new pad.

Check that the sealing pad is sitting flat and is properly in place.

REPLACING THE LID GASKET

Replace the lid gasket if it is worn or damaged. The lid gasket is located around the outside of the glass lid.

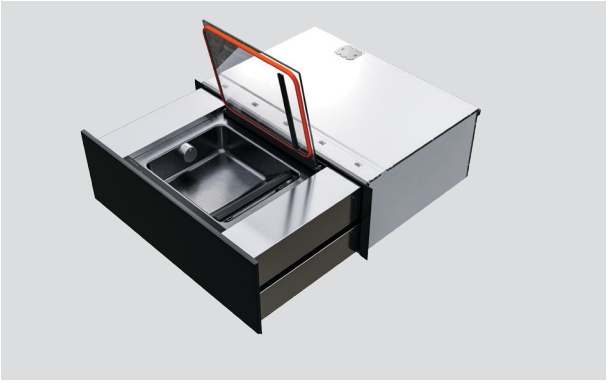

1. Remove the worn or damaged lid gasket and replace with the new gasket.

Check that the gasket is sitting flat and is properly in place.

DEHUMIDIFYING THE VACUUM PUMP

- Frequently vacuuming high-moisture food may result in water in the vacuum pump, which then needs to be dehumidified.
- The moisture indicator will light up if the vacuum pump needs to be dehumidified.

- If the moisture indicator ⎚ and the start button ▷ are both lit then you can continue to use the drawer, but we recommend running a dehumidifying cycle as soon as possible.
- If the moisture indicator ⎚ and the maintenance indicator ⓘ are both lit then you must run a dehumidifying cycle before you can use the drawer again.



1. Close the lid and hold down. Press the moisture indicator ⎚ to start the dehumidifying cycle.

- You may need to run multiple dehumidifying cycles. Each cycle takes 20 minutes. If the indicators remain lit after dehumidifying, wait 1 hour and then run the cycle again.

General use

Why won't the drawer turn on?

- No power. Make sure the product is connected to the power supply and switched on at the wall.
- Check the circuit breaker, or check if there is a power cut in your home or area. If the product still won't turn on, call Customer Care or your Authorised Service Centre.

Why isn't the drawer working?

- The lid is not closed properly. Hold down the lid to ensure it seals properly before pressing start.
- The drawer has overheated from repeated use. Allow the appliance to cool down before using again. If sealing multiple bags in a row, we recommend selecting a lower level or allowing the sealing bar to cool down in between each cycle to prevent overheating.
- The vacuum pump needs to be dehumidified. If the moisture indicator ⊘ and the maintenance indicator ⓘ are both lit then you must run a dehumidifying cycle before you can use the drawer again.
- The drawer is cooling after a dehumidifying cycle. If the indicators remain lit after dehumidifying, wait 1 hour and then run the cycle again.

Why is the appliance making noises?

- The vacuum pump can make noise while operating, this is normal.

Why is there still air in the vacuum bag?

- The vacuum level selected may have been too low. Select a higher level.
- The bag is damaged or not airtight. Try again using a new bag and a longer sealing time if needed.
- The suction inlet is obstructed by the bag. Check and reposition the bag as needed.

Why are liquids in the vacuum bag boiling while being vacuum sealed?

- Liquids can start to boil at low temperatures when under high vacuum pressure. Select a lower vacuum level when vacuum sealing liquids.

Why isn't external vacuuming working?

- The tube and vacuum stopper may need to be replaced. Check for signs of wear and tear and replace if needed.

Why isn't the bag sealed correctly?

- The sealing time was too short. Select a longer sealing time.
- The bag wasn't positioned correctly on the sealing bar. Check the position and adjust if needed.
- The bag isn't clean around the sealing area. Check and clean the sealing area before sealing.
- The sealing pad may need to be repositioned or replaced. Check the sealing pad is properly in place and sitting flat, or replace if needed.
- The sealing bar may need to be replaced. Check for signs of damage and replace if needed.
- The drawer has overheated from repeated use. Allow the appliance to cool down before using again. If sealing multiple bags in a row, we recommend selecting a lower level or allowing the sealing bar to cool down in between each cycle to prevent overheating.

Why won't the appliance lid open?

- The drawer is in operation. Wait until the drawer has finished running and the lid has released before trying to open.
- The power has been switched off to the appliance. If the power is switched off or there is a power cut while the appliance is running then the lid may remain sealed until the power is switched back on.

Why is the maintenance indicator ⓘ on?

- The lid is not closed properly. Check that there is nothing obstructing the lid from closing, such as the vacuum bag protruding or an oversized jar. Ensure you hold down the lid firmly before pressing start when vacuum sealing.
- The lid gasket is dirty or damaged and cannot form a proper seal. Clean or replace the seal, and check that it is sitting flat and is properly in place.
- If the moisture indicator is also lit then the vacuum pump needs to be dehumidified.

Why is the moisture indicator ⓘ on?

- The vacuum pump needs to be dehumidified.
- If the moisture indicator ⓘ and the start button ▷ are both lit then you can continue to use the drawer, but we recommend running a dehumidifying cycle as soon as possible.
- If the moisture indicator ⓘ and the maintenance indicator ⓘ are both lit then you must run a dehumidifying cycle before you can use the drawer again.
- You may need to run multiple dehumidifying cycles. Each cycle takes 20 minutes. If the indicators remain lit after dehumidifying, wait 1 hour and then run the cycle again.

FISHERPAYKEL.COM

© Fisher & Paykel Appliances 2026. All rights reserved.

The models shown in this guide may not be available in all markets and are subject to change at any time.

The product specifications in this guide apply to the specific products and models described at the date of issue. Under our policy of continuous product improvement, these specifications may change at any time.

For current details about model and specification availability in your country, please go to our website or contact your local Fisher & Paykel dealer.

433539A 11.26