FISHER & PAYKEL

DISHWASHER

CLASSIC MODELS

DW60UC2X, DW60UC6X, DW60UC6B

DESIGNER MODELS

DW60UD6X, DW60UD6B

CONTEMPORARY MODELS

DW60UZ6B

INSTALLATION GUIDE

⚠ WARNING!

Electrical shock hazard
Before installing the dishwasher, remove the house fuse or open the circuit breaker.
This appliance must be earthed. In the event of a malfunction or breakdown, earthing will reduce the risk of electric shock by providing a path of least resistance for electric current. This appliance is equipped with a cord having an equipment-earthing conductor and an earthing plug. The plug must be plugged into an appropriate outlet that is installed and earthed in accordance with all local codes and ordinances.
WARNING – Improper connection of the equipment-earthing conductor can result in a risk of electric shock. Check with a qualified electrician or service representative if you are in doubt as to whether the appliance is properly earthed.
Do not modify the power supply plug provided with the appliance - if it will not fit the outlet, have a proper outlet installed by a qualified electrician. Do not use an extension cord, adapter plug or multiple outlet box.
Fitting integrated front panels requires access to electrical service areas. This work must be performed and certified by a qualified electrical service technician.
Failure to follow this advice may result in electrical shock or death.

⚠ WARNING!

Cut Hazard
Take care – panel edges are sharp.
Failure to use caution could result in injury or cuts.

⚠ WARNING!

100 lb
45 kg

Very Heavy
Do not attempt to lift this product unassisted.
Lifting unassisted may cause serious injury

IMPORTANT SAFETY INSTRUCTIONS

Installation of this dishwasher requires basic mechanical and electrical skills.

- **Be sure to leave these Instructions with the Customer.**
- **Installation must comply with your local building and electricity regulations.**
- **At the completion of the dishwasher installation, the Installer must perform the Final Checklist.**
- **Remove all packaging materials supplied with the dishwasher.**

IMPORTANT SAFETY INSTRUCTIONS

Ensure all water connections are turned OFF. It is the responsibility of the plumber and electrician to ensure that each installation complies with all Codes and Regulations.

- **The dishwasher MUST be installed to allow for future removal from the enclosure if service is required.**
- **The switched power outlet must be outside the dishwasher cavity, so that it is accessible after installation.**
- **This dishwasher is manufactured for indoor use only.**
- **Care should be taken when the appliance is installed or removed to reduce the likelihood of damage to the power supply cord and hoses.**
- **If the dishwasher is to be relocated from one installation to another it must be kept upright to avoid damage from water spillage.**
- **Make sure only new hoses are used for connection (supplied with the dishwasher). Old hoses should not be reused.**
- **Failure to install the dishwasher correctly could invalidate any warranty or liability claims.**
- **If the power supply cord is damaged, it must be replaced by a dealer or Authorised Repairer or a similar qualified trades person in order to avoid a hazard.**
- **Ensure the dishwasher is placed between cabinetry. Failure to do so may result in an unstable product, which may cause damage or injury.**
- **Do not operate this appliance if it is damaged, malfunctioning, partially disassembled or has missing or broken parts, including a damaged power supply cord or plug.**
- **Do not store or use petrol, or other flammable vapours and liquids in the vicinity of the dishwasher.**
- **Connect to a properly rated, protected and sized power supply circuit to avoid electrical overload.**
- **Make sure that the power supply cord is located so that it will not be stepped on, tripped over or otherwise subject to damage or stress.**
- **Do not install or store the dishwasher where it will be exposed to temperatures below freezing or exposed to weather.**
- **Do not use an extension cord or a portable electrical outlet device (e.g. multi-socket outlet box) to connect the dishwasher to the power supply.**
- **This appliance must be earthed. In the event of a malfunction or breakdown, earthing will reduce the risk of electric shock by providing a path of least resistance for electric current.**
- **This appliance is equipped with a cord having an equipment-earthing conductor and a earthing plug. The plug must be plugged into an appropriate outlet that is installed and earthed in accordance with all local codes and ordinances.**
- **EARTHING INSTRUCTIONS - This appliance must be connected to a earthed metal, permanent wiring system, or an equipment-earthing conductor must be run with the circuit conductors and connected to the equipment-earthing terminal or lead on the appliance.**
- **Ensure the product is not plugged in when fitting custom panels.**
- **Installation of custom panels requires basic mechanical and electrical skills.**
- **Installation must comply with your local building and electricity regulations.**
- **Failure to install the custom panels correctly could invalidate any warranty or liability claims.**

IMPORTANT!
SAVE THESE INSTRUCTIONS

The models shown in this installation guide may not be available in all markets and are subject to change at any time. For current details about model and specification availability in your country, please go to our website www.fisherpaykel.com or contact your local Fisher & Paykel dealer.

PARTS SUPPLIED

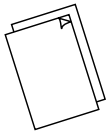

Installation guide, template and user instructions

Inlet hose (1)

Drain hose support (1)

Moisture protection tape (1)

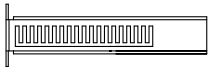

Brackets for toe kick (2)

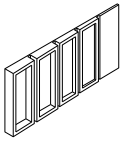

Plastic spacers (2)

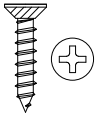

Ø3.5 x 12mm screws (4)

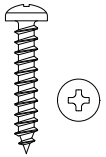

Ø4 x25mm screws (4)

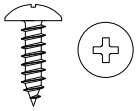

Ø4 x 13mm screws (4)

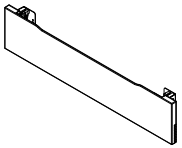

Pre-finished toe kick (1)

TECHNICAL DATA

Technical data

Check the electrical data on the rating label (located on the left-hand side of the dishwasher's stainless steel inner door). Should the data on the rating label be different to those specified below, consider those on the rating label as correct.

	DW60UC2 models	**DW60UC, DW60UD6 & DW60UZ6 models**
Capacity	15 place settings	15 place settings
Mains water pressure	0.03-1 MPa (= 0.3-10 bar)	0.03-1 MPa (= 0.3-10 bar)
Power voltage	220-240 V (50 Hz)	220-240 V (50Hz)
Maximum current Draw	10 A	10 A
Power consumption	1720-2050 W	1720-2050 W

Anti-flood protection

This dishwasher has anti-flood protection, which will shut down the incoming water supply in the event of a leak within the machine.

PRIOR TO INSTALLATION

Unpacking and handling

- Check packaging and dishwasher for signs of transport damage. If the dishwasher is in any way damaged, do not install it. Contact the dealer the dishwasher was purchased from.
- Disposal of packaging: some of the packaging is recyclable. Check the symbols and labels and recycle if possible.
- Always be careful with the hoses and power cord at the back of the dishwasher. Careful handling will prevent damage and malfunction from squashing, kinking or cuts.
- While installing the dishwasher, check the drain hose is not restricted or kinked.

Connections and services

- Check that the power cord is long enough to reach the outlet. If it isn't, it must be replaced by a Fisher & Paykel authorised technician. Extension cords or multi-outlet power boards should not be used to connect the dishwasher to the power supply.
- Check that the hoses are long enough to reach the services. If a hose needs extending, ensure that the extension hose is new and of equal quality and diameter to the one already fitted. Note: the drain hose should not be longer than 4m, as a longer drain hose will cause reduced performance.
- The dishwasher should not be connected to a water system where the temperature exceeds 60 °C, or where there is no temperature control, e.g. wetback system, unless the system is fitted with a suitable tempering valve.
- The dishwasher must not be connected to an under-sink high-pressure "push-through" type hot water system, as damage to the system will result.

PRODUCT DIMENSIONS – DW60UC

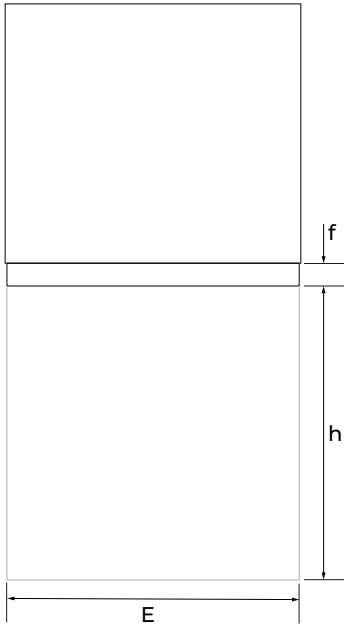

PLAN

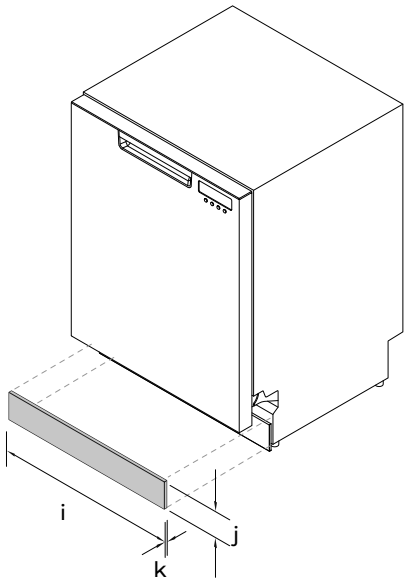

ISOMETRIC

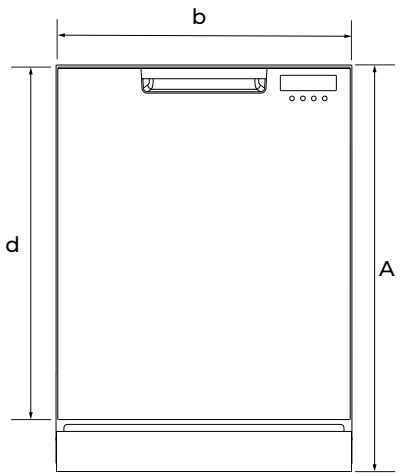

FRONT

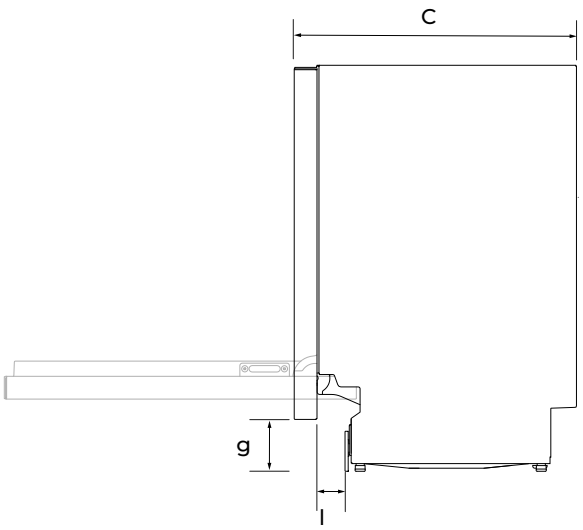

PROFILE

PRODUCT DIMENSIONS		DW60UC MODELS
		MM
A	Overall height of product*	820 - 880
B	Overall width of product**	598
C	Overall depth of product	570
D	Height of door	711
E	Width of door	590
F	Depth of door	46
G	Height from floor to bottom of door	100 - 160
H	Depth of open door	586
I	Width of toe kick panel	
	• Custom panel	596 - 605
	• Pre-finished panel	595
J	Height of toe kick panel***	
	• Custom panel	80 - 165
	• Pre-finished toe kick	82 - 127
K	Depth of toe kick panel	
	• Custom panel****	min. 16
	• Pre-finished toe kick	16
L	Depth of toe kick*****	
	• Custom panel	0 - 44
	• Pre-finished toe kick	0 - 20

*depending on adjustment of levelling feet

**excluding side seals

***depending on cabinetry dimensions

****when using supplied 12mm screws

****excluding door front and toe kick panels

PRODUCT DIMENSIONS – DW60UD

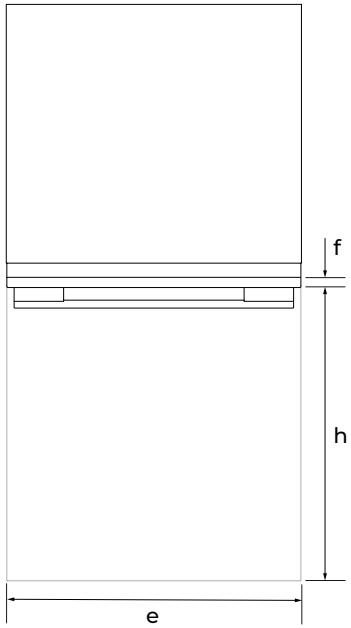

PLAN

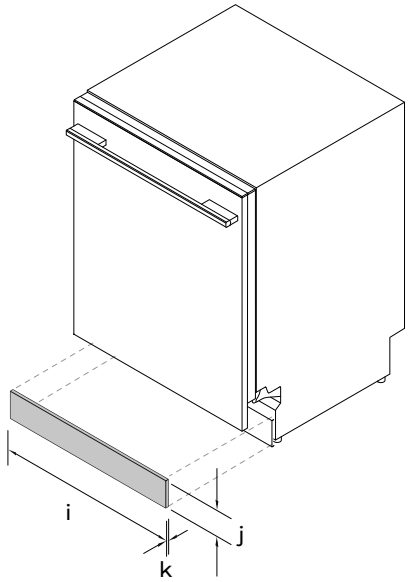

ISOMETRIC

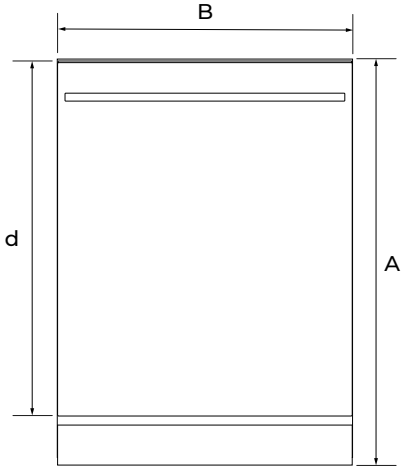

FRONT

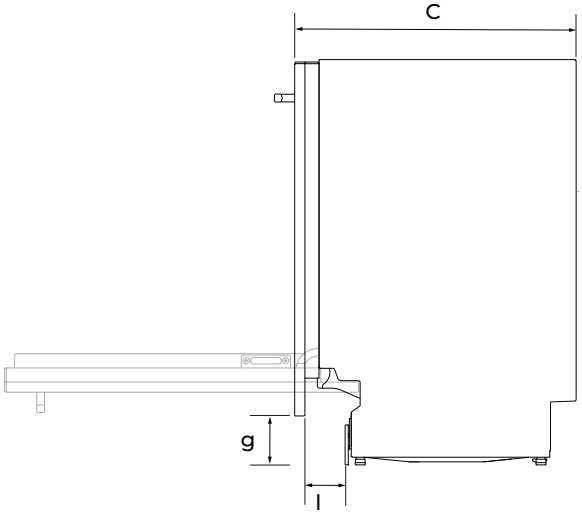

PROFILE

PRODUCT DIMENSIONS		DW60UD MODELS
		MM
A	Overall height of product*	820 - 880
B	Overall width of product**	598
C	Overall depth of product	570
D	Height of door	714
E	Width of door	595
F	Depth of outer door***	18
G	Height from floor to bottom of door	100 - 160
H	Depth of open door	583
I	Width of toe kick panel	
	• Custom panel	596 - 605
	• Pre-finished panel	595
J	Height of toe kick panel****	
	• Custom panel	80 - 165
	• Pre-finished toe kick	82 - 127
K	Depth of toe kick panel	
	• Custom panel*****	min. 16
	• Pre-finished toe kick	16
L	Depth of toe kick******	
	• Custom panel	0 - 73
	• Pre-finished toe kick	0 - 50

*depending on adjustment of levelling feet

**excluding side seals

***excluding handle

****depending on cabinetry dimensions

*****when using supplied 12mm screws

*****excluding door front and toe kick panels

PRODUCT DIMENSIONS – DW60UZ

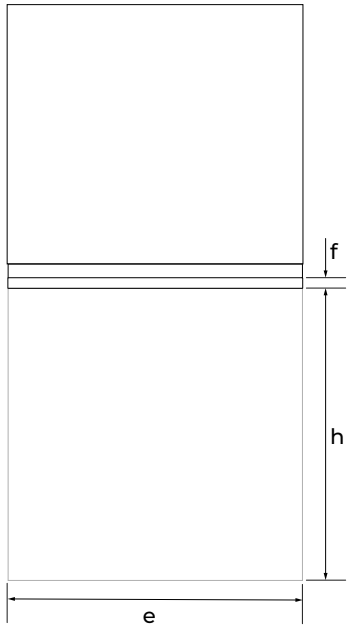

PLAN

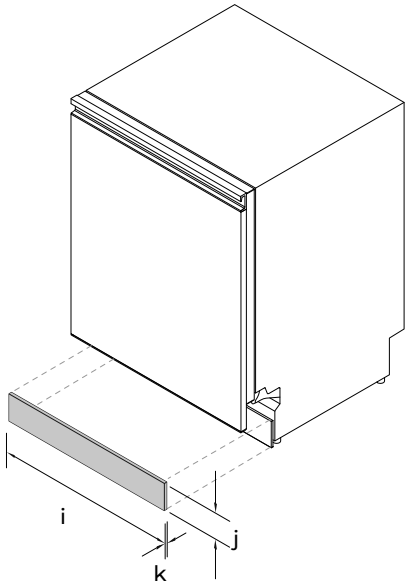

ISOMETRIC

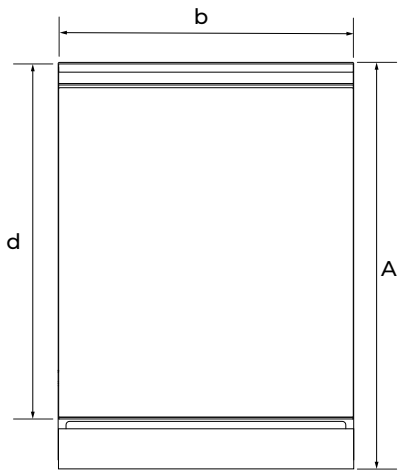

FRONT

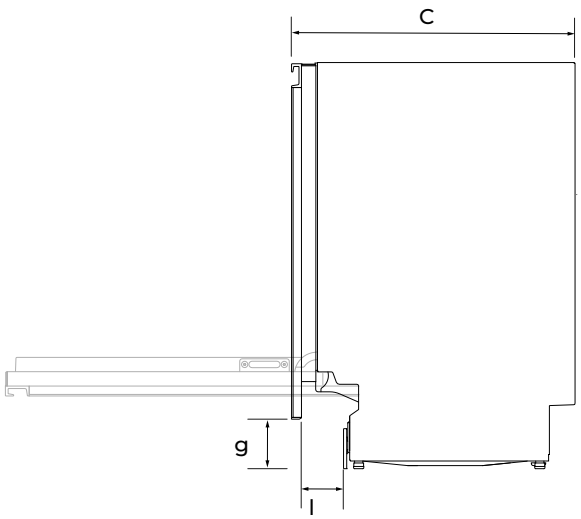

PROFILE

PRODUCT DIMENSIONS		DW60UZ MODELS
		MM
A	Overall height of product*	820 - 880
B	Overall width of product**	598
C	Overall depth of product	572
D	Height of door	717
E	Width of door	595
F	Depth of outer door	20
G	Height from floor to bottom of door	100 - 160
H	Depth of open door	582
I	Width of toe kick panel	
	• Custom panel	596 - 605
	• Pre-finished panel	595
J	Height of toe kick panel***	
	• Custom panel	80 - 165
	• Pre-finished toe kick	82 - 127
K	Depth of toe kick panel	
	• Custom panel****	min. 16
	• Pre-finished toe kick	16
L	Depth of toe kick******	
	• Custom panel	0 - 73
	• Pre-finished toe kick	0 - 50

*depending on adjustment of levelling feet

**excluding side seals

***depending on cabinetry dimensions

****when using supplied 12mm screws

*****excluding door front and toe kick panels

CABINETRY

DIMENSIONS

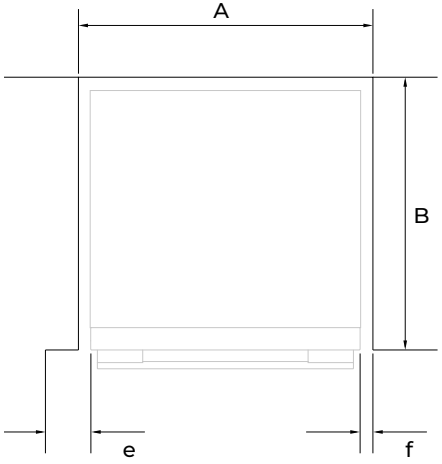

PLAN

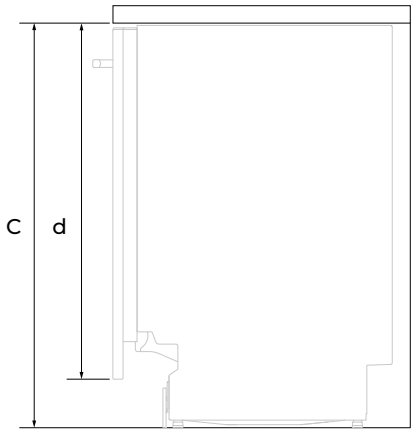

PROFILE

CABINETRY DIMENSIONS		MM
A	Inside width of cavity	600 - 610
B	Inside depth of cavity	min. 574
C	Inside height of cavity*	820 - 880
D	Distance from under bench to bottom of door*	720
E	Clearance from corner cupboard	13
F	Clearance to adjacent cupboard door	2

*depending on adjustment of levelling feet

Finished return recommended for DW60UZ models

CLEARANCES

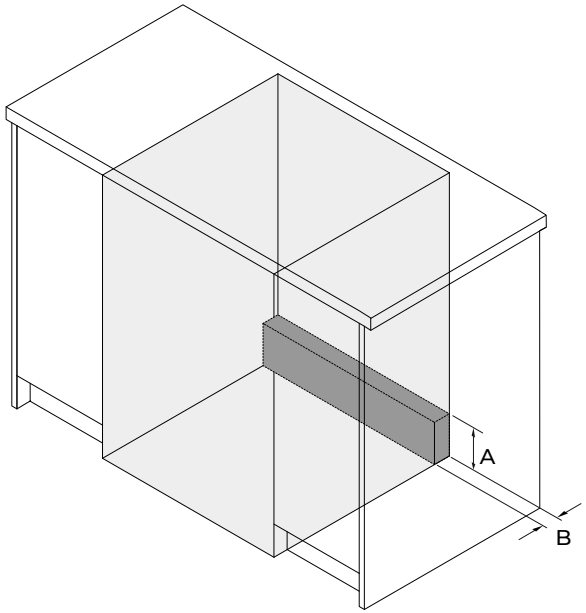

CABINETRY CLEARANCES		MM
A	Height of rear plumbing and electrical clearance*	129 - 189
B	Depth of rear plumbing and electrical clearance	50

*depending on adjustment of levelling feet

CAVITY PREPARATION

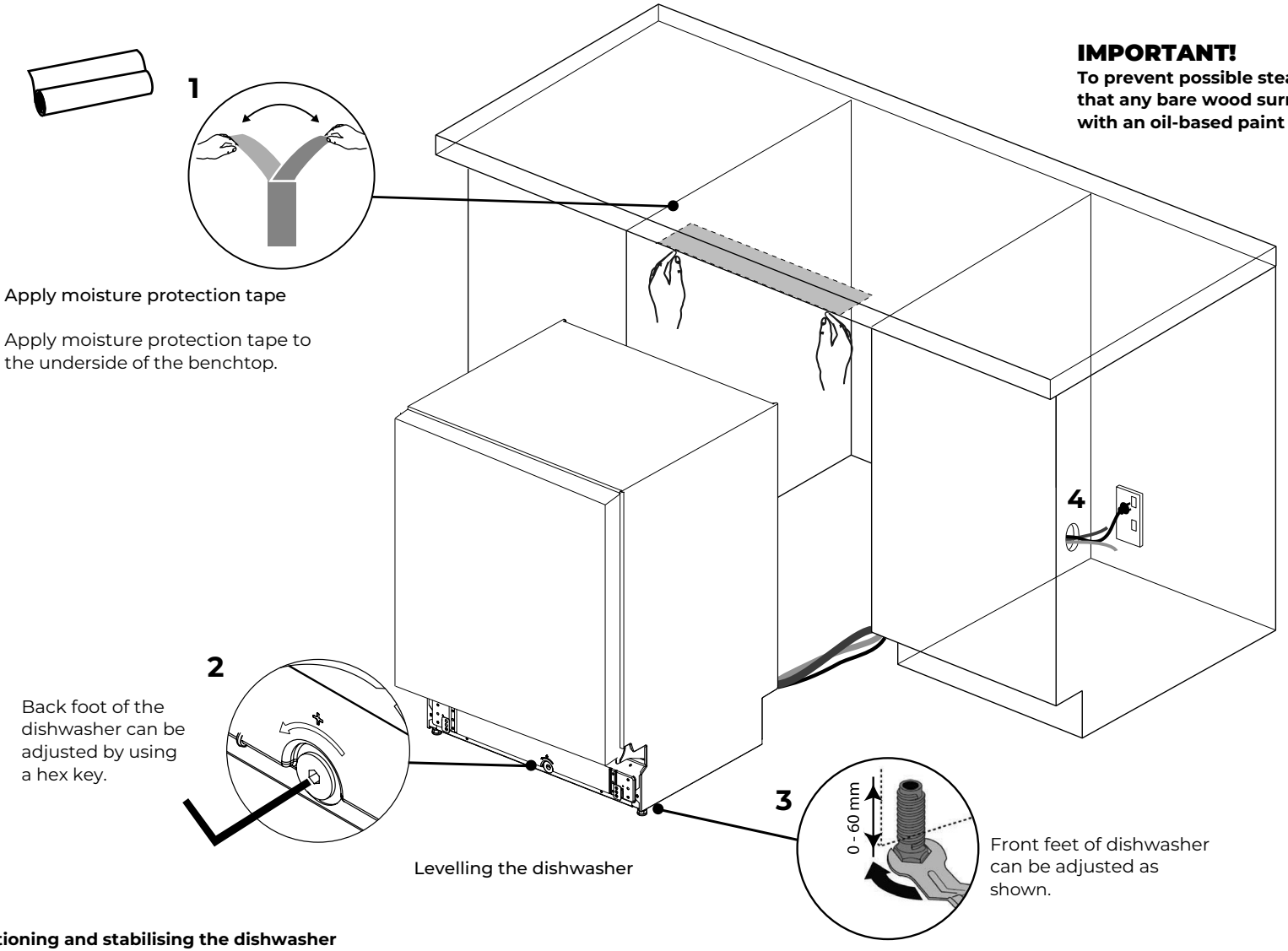

IMPORTANT!
To prevent possible steam damage to the cabinetry, ensure that any bare wood surrounding the dishwasher is sealed with an oil-based paint or moisture-proof polyurethane.

Apply moisture protection tape

Apply moisture protection tape to the underside of the benchtop.

IMPORTANT!
The power outlet must be located in a cabinet adjacent to the dishwasher cavity.

- Services can be located either side of the dishwasher.
- Ensure that any services hole has a minimum diameter of 50mm.

Back foot of the dishwasher can be adjusted by using a hex key.

Levelling the dishwasher

Front feet of dishwasher can be adjusted as shown.

Positioning and stabilising the dishwasher

- Do not lift the dishwasher from the door handle.
- As you push product in, pull through hoses and cord, ensuring they don't get kinked or twisted.
- Plastic spacers can now be inserted at the side of the dishwasher next to the hinge to improve stability - see step 11 for details on fitting spacers
- After sliding the dishwasher into position, adjust back foot with a hex key.
  The front feet can be adjusted manually also.
- We recommend that you adjust the feet so that the dishwasher sits securely under the bench top so that it doesn't tip.

TOE KICK INSTALLATION OPTIONS

SEPARATE CUSTOM PANEL

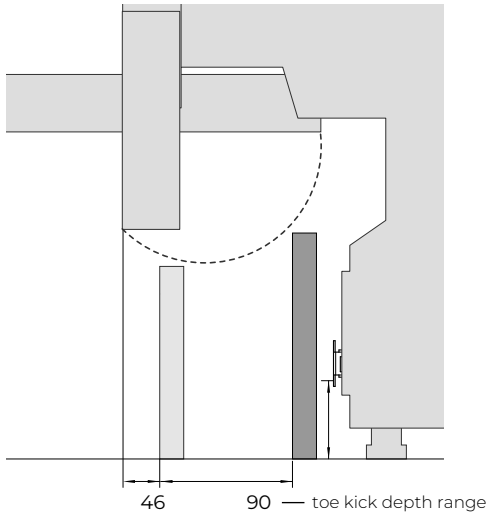

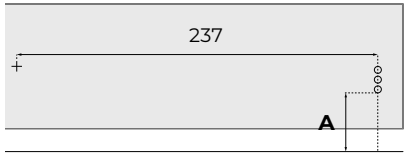

Mark out the bracket location on your panel. To establish the height in which the bracket will be fixed, measure the distance from the floor to the lowest hole of the bracket (**A**).

Remove bracket from the product and mark the location of the other holes relative to measurement (**A**). Note door overhang and swing range.

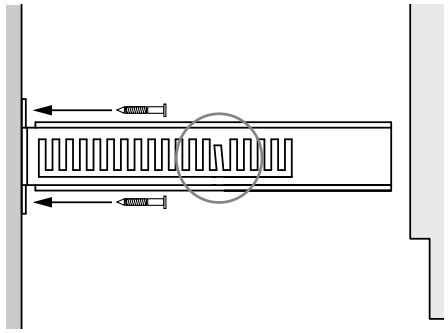

Fix brackets to panel using Ø3.5 x 12mm screws. Insert toe kick into product and mark the desired alignment depth on the bracket.

Remove panel. Using a screwdriver, bend the marked tabs out on both brackets to prevent toe kick from receding into product further.

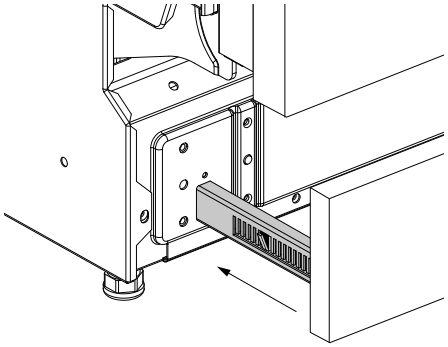

Slide toe kick firmly into the spaces on either side of the chassis to attach.

CONTINUOUS CUSTOM PANEL

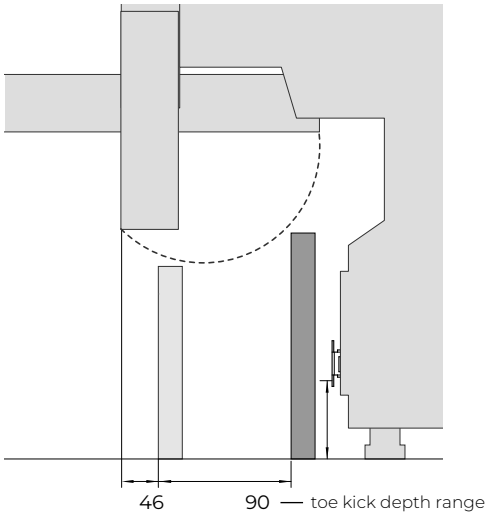

Note door overhang and swing range relative to height and depth of toe kick panel. As the panel is continuous, cutting back panel is likely to be necessary to ensure seamless integration.

IMPORTANT!

Toe kick can protrude no more than 50mm out from the dishwasher to ensure that the visibility of the floor light is not obstructed.

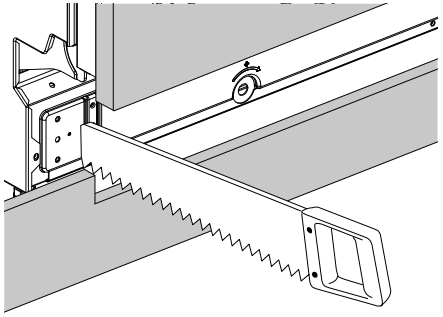

Align the toe kick to desired position and mark out the point in which the toe kick meets the base of the door panel. Cut back excess.

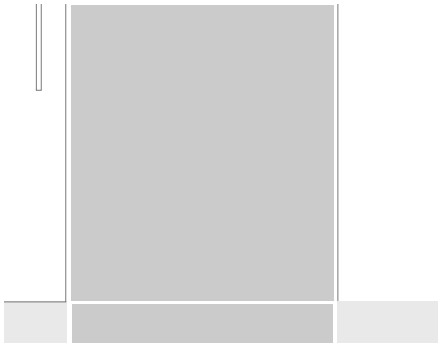

Fit continuous panel to surrounding cabinetry.

TOE KICK INSTALLATION OPTIONS

PRE-FINISHED TOE KICK

Distance between bottom of door and floor (mm)	Cut location
103 - 98	9
108 - 103	8
113 - 108	7
118 - 113	6
123 - 118	5
128 - 123	4
133 - 128	3
138 - 133	2
143 - 138	1
143+	N/A

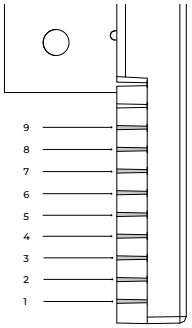

Toe kick PROFILE VIEW

Measure the distance between the floor and the base of the door to establish the toe kick height. Refer to the above guide and mark out the cut location.

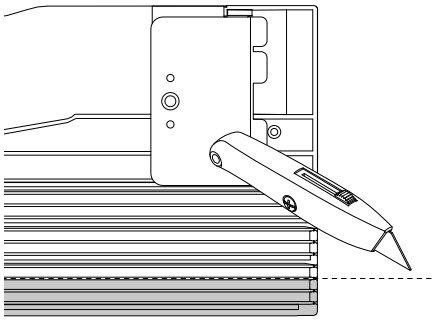

Carefully lay the toe kick face down on a cutting surface and use a sharp knife to score along the panel. Turn over and score the other side before gently snapping off the excess. A file can be used to smooth off any rough edges.

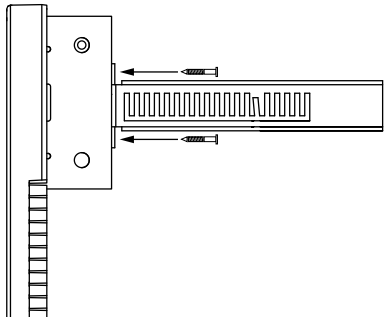

Remove the brackets from the product and secure to the toe kick using Ø4 x 13mm screws. Slide the toe kick into the spaces on either side of the chassis and mark the desired depth on the bracket. Remove toe kick and, using a screwdriver, bend the marked tabs out on both brackets.

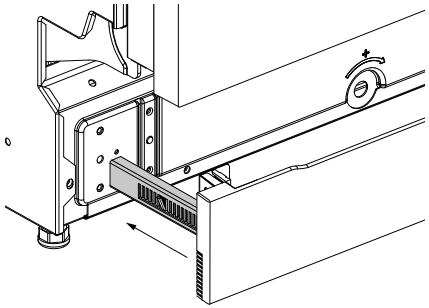

Slide toe kick firmly back into the product to attach. The bent tabs will prevent the toe kick receding into the product further than desired.

SECURING PRODUCT

As you push product in, pull through hoses and cord, ensuring they don't get kinked or twisted.

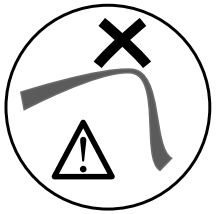

IMPORTANT!
Ensure top of door is installed flush with surrounding cabinetry

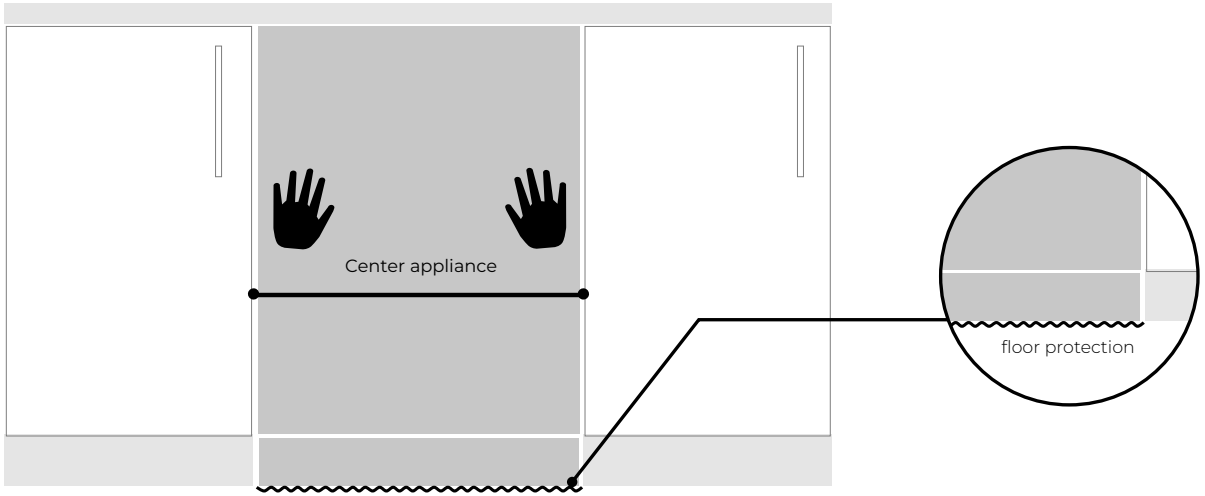

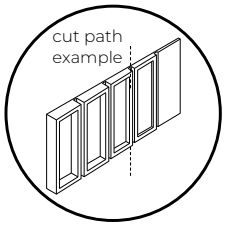

Plastic spacers can be cut to size then taped to the sides of the dishwasher to improve overall stability.

It is recommended that the spacers are placed on both sides near the hinges in identical positions.

A SECURE TO THE CABINETRY ON THE SIDES

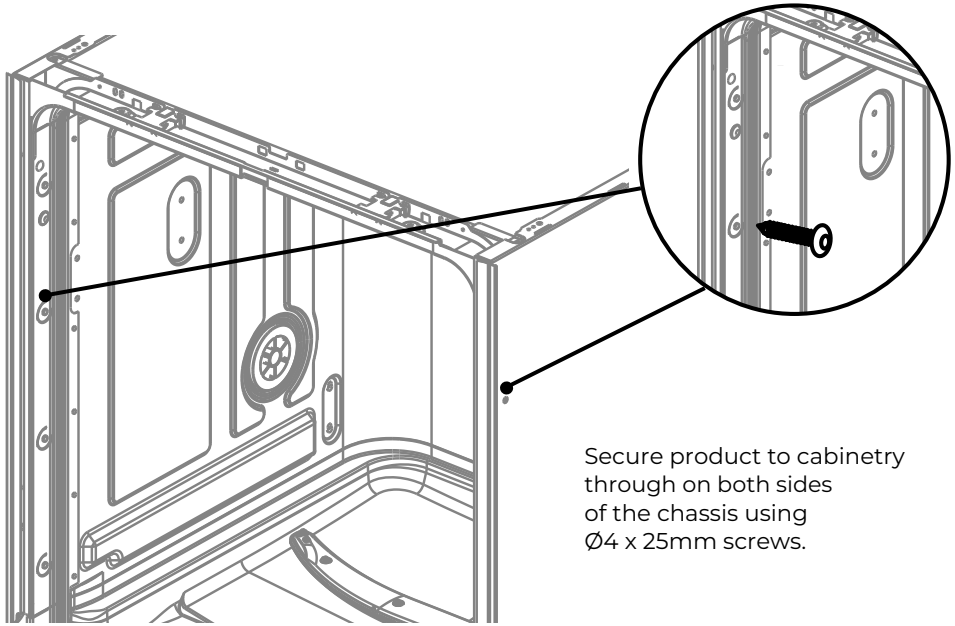

Secure product to cabinetry through on both sides of the chassis using Ø4 x 25mm screws.

B OPTIONALLY SECURE TO THE CABINETRY ABOVE

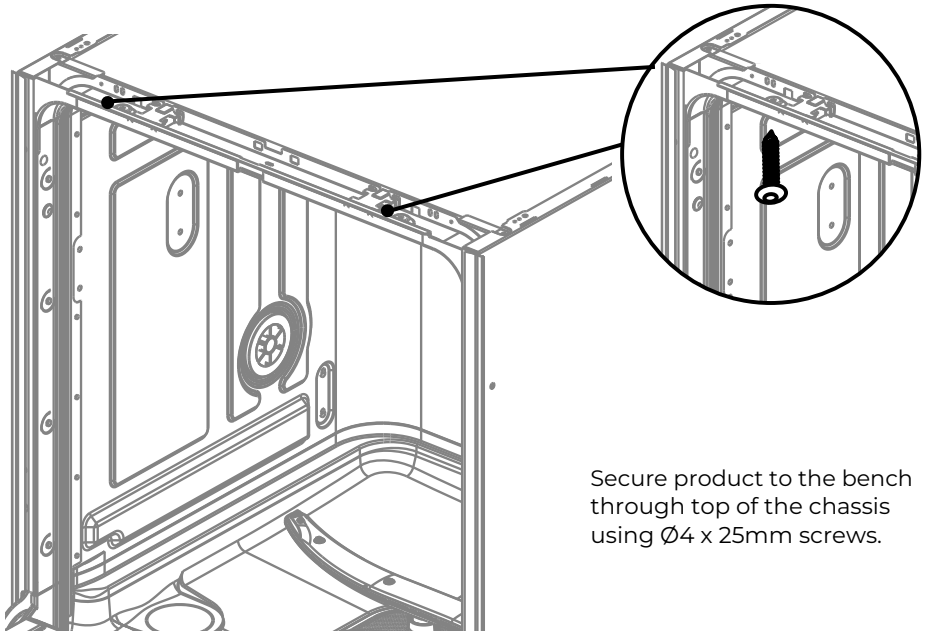

Secure product to the bench through top of the chassis using Ø4 x 25mm screws.

PLUMBING AND DRAINAGE OPTIONS

Ø 38 MM STANDPIPE

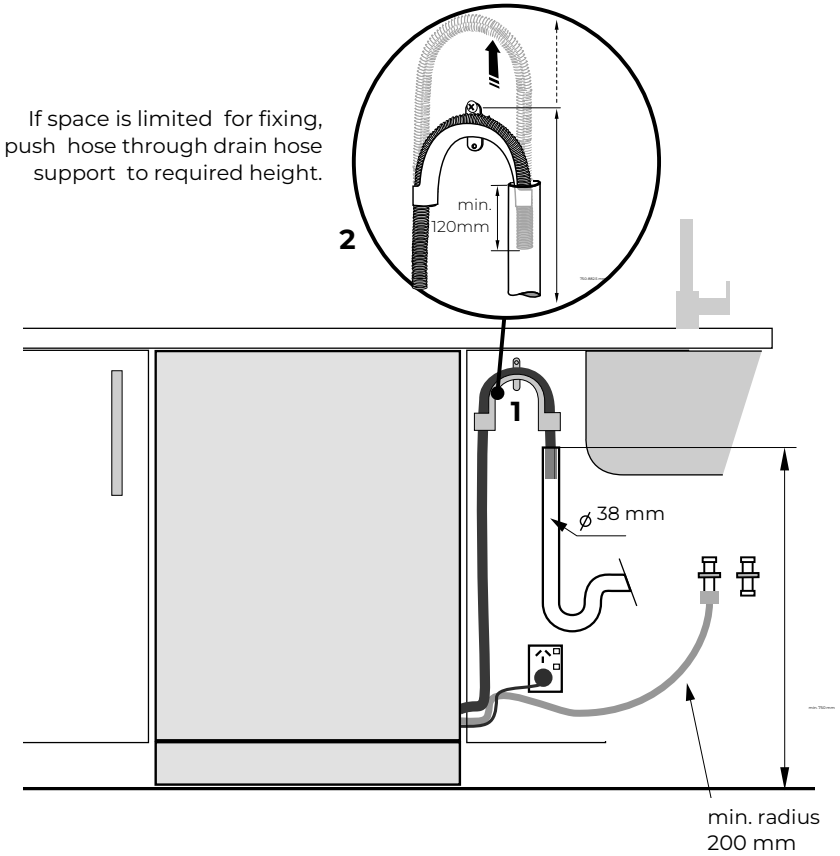

IMPORTANT!
Ensure that drain hose is installed as close to the underside of the benchtop as possible. This will ensure no waste re-enters the drain hose in the event of poor flow or a blockage in the plumbing.

Ensure the drain hose does not extend into water retained in the trap. An air gap is required to prevent waste water from siphoning back into the tub.

DRAIN HOSE JOINER ONTO SINK TRAP/WASTE TEE

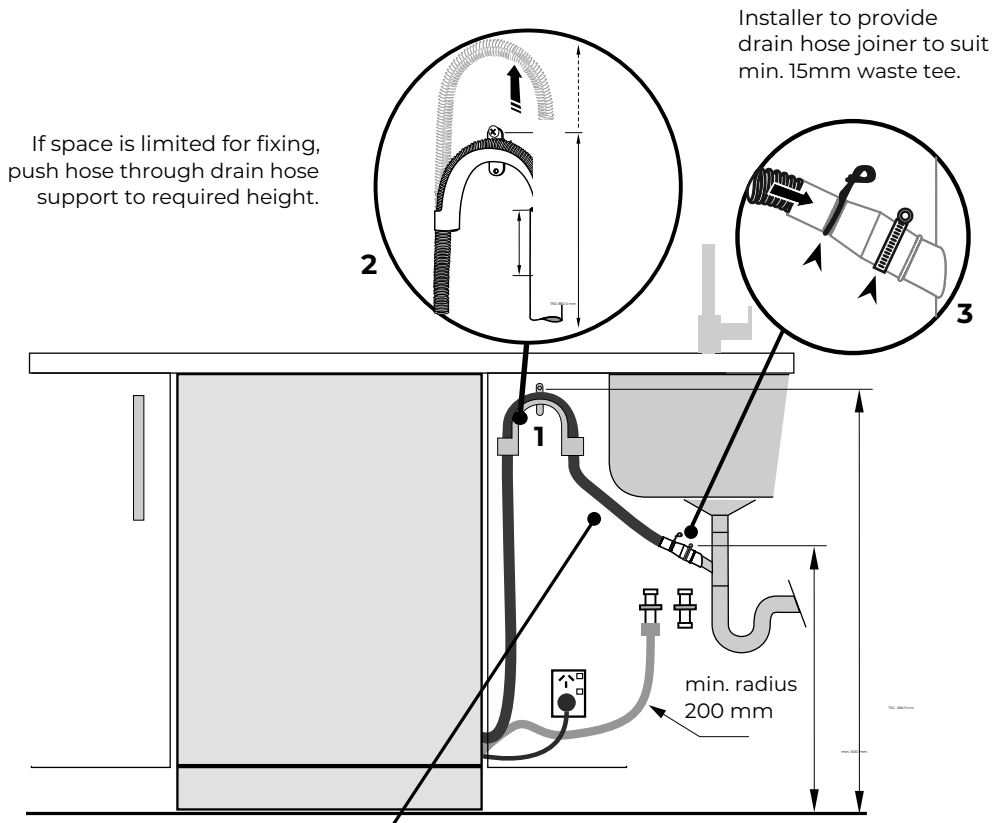

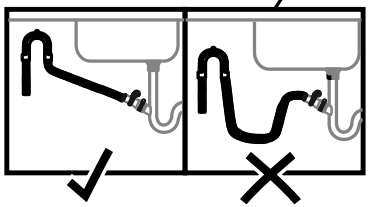

Ensure drain hose is routed straight to joiner. Remove *excess* drain hose material if necessary. Do not shorten the inlet hose.

IMPORTANT!
Do not connect the drain hoses to a Waste Disposal Unit, as this type of connection may lead to a blockage in the drain hoses.

Ensure any knock-outs or plugs in drain connection have been drilled out.

CONNECT INLET HOSE TO COLD WATER

Plumbing — Water inlet connection

IMPORTANT!

- **Ensure the appliance is connected to the water main using the supplied new water inlet hose. Do not use old hoses.**
- **Do not shorten the inlet hose.**

1 Follow the water connection requirements.
   - We recommend a cold water connection for best performance and energy efficiency.
   - The incoming water temperature should not exceed 25 °C.

2 Water pressure:
   - Take note of the permitted water pressure extremes.
   - Lowest: 0.3 bar = 3 N/cm2 = 30kPa
   - Where pressure is below 1 bar, contact a qualified plumber
   - Highest: 10 bar = 100 N/cm2 = 1MPa
   - Where pressure is above 10 bar, a pressure reduction valve must be installed. Contact a qualified plumber

3 Connect the water inlet hose to an accessible water tap with a 3/4” BSP connector.
Ensure that there is no kink in the inlet hose that could restrict the flow of water.
A 90 ° bend requires a minimum height of 200mm for a kink-free curve.
   - Ensure incoming water is clear. If the water pipes have not been used for a long period of time, let the water run to make sure it is clear with no impurities. Not doing so may result in the water inlet hose getting blocked and damaging the appliance.
   - If required, use a filter insert to filter out deposits from the piping. The filter insert is available from your Fisher & Paykel trained and supported service technician or Customer Care.

4 Tighten the hose coupling a further half turn after seal contact.

5 Check that the connection does not leak.

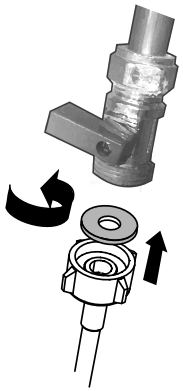

1 Ensure the supplied rubber washer is fitted inside the coupling.

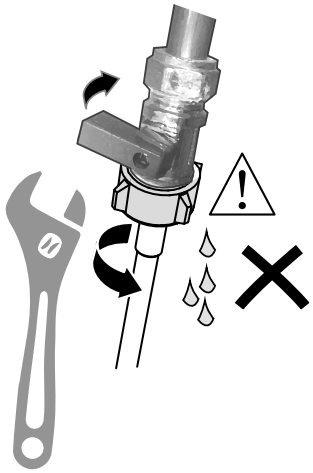

2 Tighten coupling with spanner.

CONNECT TO POWER

Electrical connection

- Do not connect the dishwasher to the electrical supply while installation is on-going. Ensure all domestic wiring is properly earthed.
- Check the rating label (located on the left-hand side of the dishwasher’s stainless steel inner door) and ensure that the voltage and frequency values for the current in the house correspond to those on the rating label.
- Insert the plug into a properly earthed power outlet that has a disconnection switch.

IMPORTANT!

- **The earthing of the appliance is a safety requirement mandated by law.**
- **If the power cord is not long enough to reach the outlet or the outlet to which the appliance must be connected is not appropriate for the plug, the entire dishwasher power cord must be replaced. This should only be done by a Fisher & Paykel trained and supported service technician. Do not modify or cut the plug. Do not use an adaptor, extension cord, or multi-outlet power board to connect the dishwasher to the power supply, as these could cause overheating and create a fire hazard.**
- **The outlet into which the dishwasher is plugged must remain easily accessible (eg in an adjacent cabinet) even when the appliance is installed.**
  This is to ensure that the dishwasher can be disconnected from the power supply for safe cleaning and maintenance.

TROUBLESHOOTING

Excessive water remaining above the filter plate, after the rinse cycle (This can be displayed as an A20 fault)
- Check for a kinked drain hose, blocked waste connection, highloop not properly installed, drain hose not routed correctly or spray arms not in place.

No water supply (This is displayed as an A 10 fault)
- Check water is connected and turned on.

The dishwasher is beeping continuously
- There is a fault. See section 'How to attend to a fault' in the User guide for further information and instructions.

Water around water supply and drainage connections
- Check connections, existing plumbing and hoses for leaks. Check rubber washer and hose clamp are correctly fitted.

If product is tipping
The product is not secure under the benchtop. Ensure the product is level and placed between cabinetry. Adjust the feet so that the dishwasher sits securely under the benchtop.

- If a problem occurs, consult the 'Troubleshooting' section of the User guide.

- If after checking these points you still need assistance, please refer to the Service & Warranty book for warranty details and your nearest Authorised Service Centre, or contact us through our website, listed below.

If front panel is misaligned
- Check and re-level appliance.
- Check the cabinetry is square.

FINAL CHECKLIST

✓ **TO BE COMPLETED BY THE INSTALLER**

- ☐ Check all parts are installed.
- ☐ Ensure that all panels and parts thereof are secure and final electrical tests have been conducted in accordance with local electrical regulations.
- ☐ Check that the dishwasher is level. If necessary, adjust the levelling feet slightly. To ensure optimum performance, the dishwasher should not be inclined more than 1 °. Check with a spirit level.
- ☐ Ensure inlet hose to water supply has supplied rubber washer fitted, and that it's tightened a further half turn after seal contact.
- ☐ Ensure any knock-outs or plugs in drain connection have been drilled out and drain connection has been made.
- ☐ The drain hose joiner must not support the weight of excess hose material. Keep drain hose as fully extended as possible to prevent sagging. Any excess length of drain hose should be kept on the dishwasher side of the highloop.
- ☐ If connecting the drain hose to the sink trap, ensure the Highloop is a minimum 150mm higher than the drain hose joiner.
- ☐ Ensure any packaging or tape securing the racks is removed from the dishwasher.
- ☐ Ensure product is level and opens and closes freely. The door must be free to fully close without being obstructed by adjoining cabinetry or the floor.
- ☐ Check that the door opens and closes freely without resistance to adjacent cabinetry.
- ☐ Check that the electrical outlet is accessible and located in an adjacent cupboard.
- ☐ Check the operation of the dishwasher:
  1. Open door to turn dishwasher on
  2. Select the Rinse programme:
  3. Press > to start the Rinse programme. Can you hear the dishwasher filling?
  4. When the Rinse programme is over (approx. 20 minutes), check that the water has drained.
- ☐ If a fault code appears, see the 'Fault codes' section of the User guide for advice.

Complete and keep for safe reference:

Model _____

Serial No. _____

Purchase Date _____

Purchaser _____

Dealer Address _____

Installer's Name _____

Installer's Signature _____

Installation Company _____

Installation Date _____

FISHERPAYKEL.COM

© Fisher & Paykel Appliances 2020. All rights reserved.

The models shown in this guide may not be available in all markets and are subject to change at any time.

The product specifications in this guide apply to the specific products and models described at the date of issue. Under our policy of continuous product improvement, these specifications may change at any time.

For current details about model and specification availability in your country, please go to our website or contact your local Fisher & Paykel dealer.