DISHDRAWER™ DISHWASHERS

PLANNING GUIDE

SERIES 9

INTEGRATED SINGLE | DD24S4I2 | DD24ST4I2 | DD24ST4HI2
INTEGRATED DOUBLE | DD24D4I2 | DD24DT4I2 | DD24DT4HI2

CONTEMPORARY SINGLE | DD24ST4DX2
CONTEMPORARY DOUBLE | DD24DT4DX2

PROFESSIONAL SINGLE | DD24ST4PX2
PROFESSIONAL DOUBLE | DD24DT4PX2

SERIES 7

CONTEMPORARY SINGLE | DD24S2CX2 | DD24ST2CX2
CONTEMPORARY DOUBLE | DD24DT2CX2 | DD24D2CX2

FISHER & PAYKEL

INTRODUCTION

This comprehensive planning guide provides you with the framework and tools to achieve your desired design outcome with Fisher & Paykel appliances. In this guide, you will find a range of conceptual, detailed, and dimensional product information to bring your ideas to life and create spaces that truly reflect your vision.

SUPPORT

For additional design planning and installation support please contact the Fisher & Paykel design support team.
designsupport@fisherpaykel.com

NOTES

The models shown in this Planning Guide may not be available in all markets and are subject to change at any time. Refer to our website fisherpaykel.com for the latest document version. Product specifications may vary from those shown.
This Planning Guide should not be used as installation guidance for any product. Specific installation guidance will be available with the product on delivery and on our website.

CONTENTS

CONCEPT DESIGN	PAGE
DESIGN CHOICE	
Style overview	**4**
Integrated	**5**
Contemporary and professional	**6**
SPECIFICATION GUIDE	
INTEGRATED	
Series 9 DD24S4I2	**8**
Series 9 DD24ST4I2, DD24ST4HI2	**10**
Series 9 DD24D4I2	**12**
Series 9 DD24DT4I2, DD24DT4HI2	**14**
CONTEMPORARY	
Series 9 DD24ST4DX2	**16**
Series 7 DD24S2CX2	**18**
Series 7 DD24ST2CX2	**20**
Series 7 DD24D2CX2	**22**
Series 7 DD24DT2CX2	**24**
Series 9 DD24DT4DX2	**26**
PROFESSIONAL	
Series 9 DD24ST4PX2	**28**
Series 9 DD24DT4PX2	**30**

DEVELOPED AND DETAILED DESIGN	PAGE

DEVELOPED AND DETAILED DESIGN	PAGE

The models shown in this Planning Guide may not be available in all markets and are subject to change at any time. Product specifications may vary from those shown. This Planning Guide should not be used as installation guidance for any product. Further information is required to safely and correctly install the products featured here. Specific installation guidance will be available with the product on delivery and on our website fisherpaykel.com

© FISHER & PAYKEL APPLIANCES LIMITED 2026

DESIGN CHOICE

© FISHER & PAYKEL APPLIANCES LIMITED 2026

INTEGRATED DISHDRAWER™ DISHWASHER

CUSTOM PANEL READY OR ACCESSORY HANDLE OPTIONS

With minimal installation gaps for a precise, flush fit, Integrated style DishDrawer™ Dishwashers blend effortlessly into surrounding cabinetry.

Choose to fully conceal with custom panels or contrast with stainless steel finishes for a cohesive, considered kitchen design.

PROFESSIONAL DISHDRAWER™ DISHWASHER

PROFESSIONAL PROUD HANDLE

The professional proud handle provides a confident visual statement, with a tactile element that complements the overall design aesthetic.

CONTEMPORARY DISHDRAWER™ DISHWASHER

CONTEMPORARY PROUD HANDLE

The proud handle adds visual definition and a tactile element that enhances both the look and usability of the design.

POCKET HANDLE

The pocket handle offers versatile styling, designed to align with a wide range of appliance aesthetics, whether specified for a replacement appliance or a new kitchen design.

Defined by clean lines and timeless design cues, Contemporary style DishDrawer™ Dishwashers bring a sense of balance and refinement to the kitchen.

The models shown in this Planning Guide may not be available in all markets and are subject to change at any time. Product specifications may vary from those shown. This Planning Guide should not be used as installation guidance for any product. Further information is required to safely and correctly install the products featured here. Specific installation guidance will be available with the product on delivery and on our website fisherpaykel.com

SINGLE DRAWER

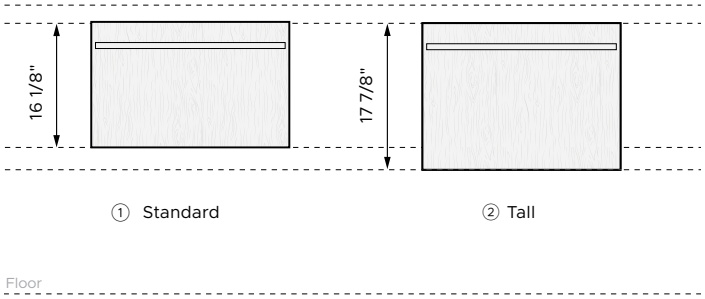

DOUBLE DRAWER

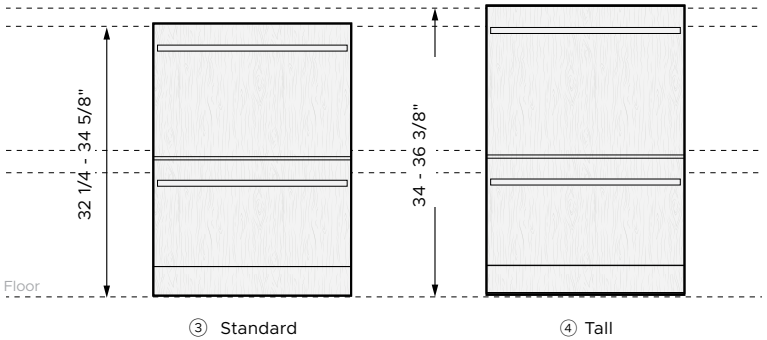

STYLE	MODELS	PANEL OPTIONS	HANDLE OPTIONS
① Integrated Single DishDrawer™ Dishwasher Series 9	DD24S4I2	Custom panel Single Stainless Steel, ADDD24SPX	Custom handle, Accessory handles*
② Integrated Tall Single DishDrawer™ Dishwasher Series 9	DD24ST4I2 DD24ST4HI2	Custom panel Tall Single Stainless Steel, ADDD24STPX	Custom handle, Accessory handles*
③ Integrated Double DishDrawer™ Dishwasher Series 9	DD24D4I2	Custom panel Double Stainless Steel, ADDD24DPX	Custom handle, Accessory handles*
④ Integrated Tall Double DishDrawer™ Dishwasher Series 9	DD24DT4I2 DD24DT4HI2	Custom panel Tall Double Stainless Steel, ADDD24DTPX	Custom handle, Accessory handles*

*Contemporary Brushed Aluminium AHD7DDDW24S, Contemporary Brushed Aluminium Black AHD7DDDW24B, Minimal Grey Handle AHM1DDDW24G, Minimal Black Handle AHM1DDDW24B, Professional Flush P3 Stainless Steel AHP3-DWDD-SX, Professional Flush P3 Dark Copper AHP3DDDW24DC, Professional Flush P3 Brass AHP3DDDW24BA.

The models shown in this Planning Guide may not be available in all markets and are subject to change at any time. Product specifications may vary from those shown. This Planning Guide should not be used as installation guidance for any product. Further information is required to safely and correctly install the products featured here. Specific installation guidance will be available with the product on delivery and on our website fisherpaykel.com

SINGLE DRAWER

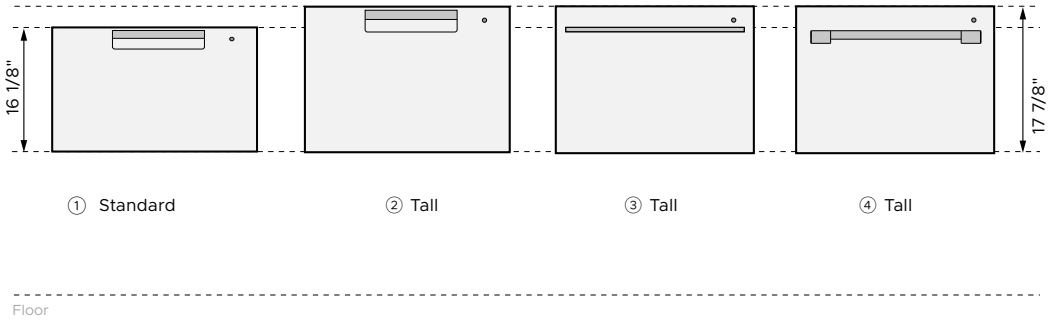

DOUBLE DRAWER

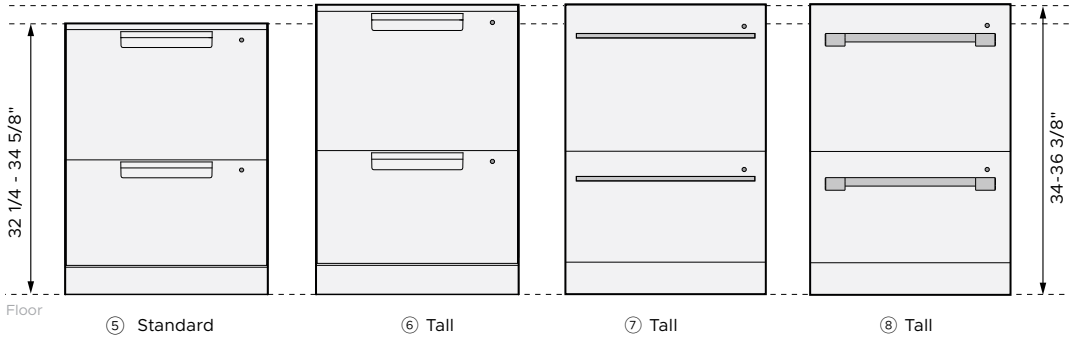

STYLE	MODELS	FINISH	HANDLE STYLE
① Contemporary Single DishDrawer™ Dishwasher Series 7	DD24S2CX2	Stainless Steel	Contemporary Pocket handle
② Contemporary Tall Single DishDrawer™ Dishwasher Series 7	DD24ST2CX2	Stainless Steel	Contemporary Pocket handle
③ Contemporary Tall Single DishDrawer™ Dishwasher Series 9	DD24ST4DX2	Stainless Steel	Contemporary Proud handle
④ Professional Tall Single DishDrawer™ Dishwasher Series 9	DD24ST4PX2	Stainless Steel	Professional Proud handle
⑤ Contemporary Double DishDrawer™ Dishwasher Series 7	DD24D2CX2	Stainless Steel	Contemporary Pocket handle
⑥ Contemporary Tall Double DishDrawer™ Dishwasher Series 7	DD24DT2CX2	Stainless Steel	Contemporary Pocket handle
⑦ Contemporary Tall Double DishDrawer™ Dishwasher Series 9	DD24DT4DX2	Stainless Steel	Contemporary Proud handle
⑧ Professional Tall Double DishDrawer™ Dishwasher Series 9	DD24DT4PX2	Stainless Steel	Professional Proud handle

The models shown in this Planning Guide may not be available in all markets and are subject to change at any time. Product specifications may vary from those shown. This Planning Guide should not be used as installation guidance for any product. Further information is required to safely and correctly install the products featured here. Specific installation guidance will be available with the product on delivery and on our website fisherpaykel.com

SPECIFICATION GUIDE

© FISHER & PAYKEL APPLIANCES LIMITED 2026

DD24S4I2

OVERVIEW

The Series 9 Integrated Single DishDrawer™ Dishwasher is designed for true half-load dish care in a single drawer format. Panel-ready for seamless cabinetry integration, it supports flexible placement within the kitchen, while advanced wash technology and intuitive controls help support improved energy and water efficiency.

PRODUCTS

Series 9 Integrated Single DishDrawer™ Dishwasher
DD24S4I2

SERIES & STYLE

Series 9
Custom and accessory handle options

FEATURES

1 Single drawer designed for true half-load dish care.

2 Panel-ready design supports seamless integration within custom cabinetry.

3 Capacitive touch controls make everyday operation simple and intuitive.

4 Standard-height drawer fits full-size dinner plates and everyday cookware.

5 Designed to suit everyday dish loads without needing to fill a full dishwasher.

6 Designed for counter-height installation to support ergonomic access.

7 Advanced wash technology supports improved energy and water efficiency.

8 Versatile wash cycles and modifiers support varied dish care needs.

9 Fan-assisted drying helps leave dishes ready to use.

10 Can be paired with other DishDrawer™ Dishwasher models or installed on its own.

11 New Door installation adjustment system allows fast and accurate door alignment to the surrounding cabinetry. Designed to fit, perfect results, beautiful to use.

The models shown in this Planning Guide may not be available in all markets and are subject to change at any time. Product specifications may vary from those shown. This Planning Guide should not be used as installation guidance for any product. Further information is required to safely and correctly install the products featured here. Specific installation guidance will be available with the product on delivery and on our website fisherpaykel.com

PRODUCT DIMENSIONS

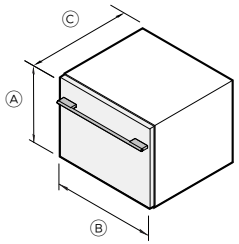

ISO VIEW

	In	mm
A Overall height	16 1/8	410
B Overall width	23 9/16	599
C Overall depth*	21 3/4	553

*Does not include integrated door panel.

CAVITY DIMENSIONS

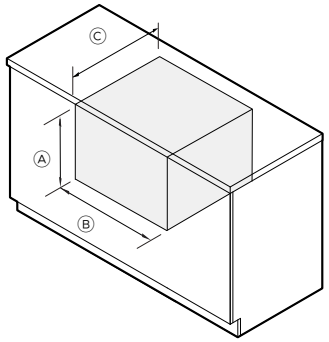

ISO VIEW

	In	mm
A Overall height	min 16 1/4	min 412
B Overall width	min 23 5/8	min 600
C Overall depth	min 22 5/8	min 575

PLUMBING AND ELECTRICAL

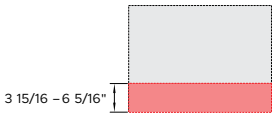

REAR VIEW

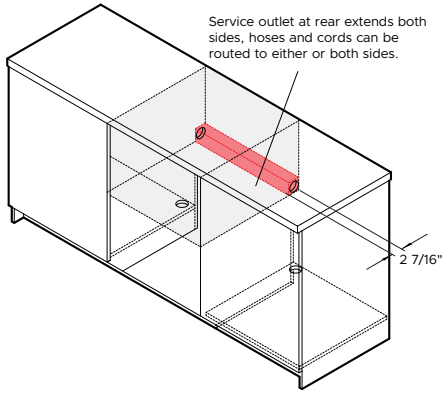

ISO VIEW

PRODUCT SPECIFICATIONS

Weight	72 lbs (33 kg)
Packaged Weight	88 lbs (40 kg)
Packaged dimensions	**H** 20 1/2" (520mm) x **W** 27 9/16" (700mm) x **D** 28 3/8 (720mm)
Electrical	
Dedicated Service (A)	5A
Rated Power (W)	600
Supply (Hz)	60
Rated Power (W)	600
Voltage (V)	120
Plumbing	
Supply	3/8" male compression fitting or Nut 9/16".
Pressure	Min 0.03 Mpa (4.35psi), Max 1 Mpa (145psi) Cold water connection @ 20°C

The models shown in this Planning Guide may not be available in all markets and are subject to change at any time. Product specifications may vary from those shown. This Planning Guide should not be used as installation guidance for any product. Further information is required to safely and correctly install the products featured here. Specific installation guidance will be available with the product on delivery and on our website fisherpaykel.com

© FISHER & PAYKEL APPLIANCES LIMITED 2026

DD24ST4I2, DD24ST4HI2

OVERVIEW

The Series 9 Integrated Tall Single DishDrawer™ Dishwasher extends the drawer format with added height to accommodate larger dishes and cookware. Designed for true half-load dish care, it supports flexible kitchen planning and counter-height installation, while advanced wash technology and intuitive controls help support improved energy and water efficiency.

PRODUCTS

Series 9 Integrated Tall Single DishDrawer™ Dishwasher
DD24ST4I2, DD24ST4HI2 (water softener model)

SERIES & STYLE

Series 9
Custom and accessory handle options

FEATURES

1 Tall single drawer designed for true half-load dish care.

2 Panel-ready design supports seamless integration within custom cabinetry.

3 Capacitive touch controls make everyday operation simple and intuitive.

4 Extra height fits larger dishes and cookware, including full-size dinner plates up to 12" in diameter.

5 Designed to suit everyday dish loads without needing to fill a full dishwasher.

6 Designed for counter-height installation to support ergonomic access.

7 Advanced wash technology supports improved energy and water efficiency.

8 Versatile wash cycles and modifiers support varied dish care needs.

9 Fan-assisted drying helps leave dishes ready to use.

10 Can be paired with other DishDrawer™ Dishwasher models or installed on its own.

11 New Door installation adjustment system allows fast and accurate door alignment to the surrounding cabinetry. Designed to fit, perfect results, beautiful to use.

The models shown in this Planning Guide may not be available in all markets and are subject to change at any time. Product specifications may vary from those shown. This Planning Guide should not be used as installation guidance for any product. Further information is required to safely and correctly install the products featured here. Specific installation guidance will be available with the product on delivery and on our website fisherpaykel.com

PRODUCT DIMENSIONS

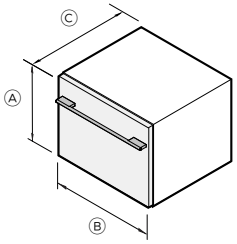

ISO VIEW

CAVITY DIMENSIONS

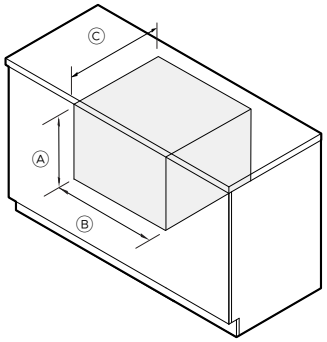

ISO VIEW

PLUMBING AND ELECTRICAL

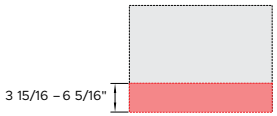

REAR VIEW

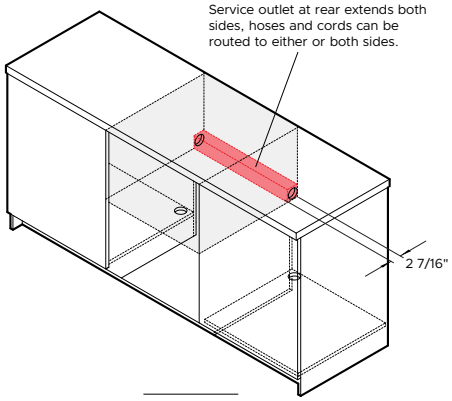

ISO VIEW

		In	mm
A	Overall height	17 7/8	454
B	Overall width	23 9/16	599
C	Overall depth*	21 3/4	553

*Does not include integrated door panel.

		In	mm
A	Overall height	min 18	min 457
B	Overall width	min 23 5/8	min 600
C	Overall depth	min 22 5/8	min 575

PRODUCT SPECIFICATIONS

Weight	72 lbs (33 kg)
Packaged Weight	88 lbs (40 kg)
Packaged dimensions	**H** 20 1/2" (520mm) x **W** 27 9/16" (700mm) x **D** 28 3/8 (720mm)
Electrical	
Dedicated Service (A)	5A
Supply (Hz)	60
Rated Power (W)	600
Voltage (V)	120
Plumbing	
Supply	3/8" male compression fitting or Nut 9/16".
Pressure	Min 0.03 Mpa (4.35psi), Max 1 Mpa (145psi) Cold water connection @ 20°C
	Water softener model: Min 0.1 Mpa (14.5psi), Max 1 Mpa (145psi) Cold water connection @ 20°C

The models shown in this Planning Guide may not be available in all markets and are subject to change at any time. Product specifications may vary from those shown. This Planning Guide should not be used as installation guidance for any product. Further information is required to safely and correctly install the products featured here. Specific installation guidance will be available with the product on delivery and on our website fisherpaykel.com

© FISHER & PAYKEL APPLIANCES LIMITED 2026

DD24D4I2

OVERVIEW

The Series 9 Integrated Double DishDrawer™ Dishwasher is designed for seamless integration within custom cabinetry. Independent drawers support flexible dish care, while advanced wash technology and intuitive controls help support improved energy and water efficiency.

PRODUCTS

Series 9 Integrated Double DishDrawer™ Dishwasher
DD24D4I2

SERIES & STYLE

Series 9
Custom and accessory handle options

FEATURES

1 Independent drawers can run separately or together.

2 Panel-ready design supports seamless integration within custom cabinetry.

3 Designed for counter-height installation to support ergonomic access.

4 Capacitive touch controls make everyday operation simple and intuitive.

5 Advanced wash technology supports improved energy and water efficiency.

6 Each drawer fits full-size dinner plates up to 11" in diameter.

7 Adaptable racking accommodates a range of dishware and cookware.

8 Versatile wash cycles and modifiers support varied dish care needs.

9 Fan-assisted drying helps leave dishes ready to use.

10 SmartHQ™ connectivity offers remote control and notifications through the app.

11 New Door installation adjustment system allows fast and accurate door alignment to the surrounding cabinetry. Designed to fit, perfect results, beautiful to use.

The models shown in this Planning Guide may not be available in all markets and are subject to change at any time. Product specifications may vary from those shown. This Planning Guide should not be used as installation guidance for any product. Further information is required to safely and correctly install the products featured here. Specific installation guidance will be available with the product on delivery and on our website fisherpaykel.com

PRODUCT DIMENSIONS

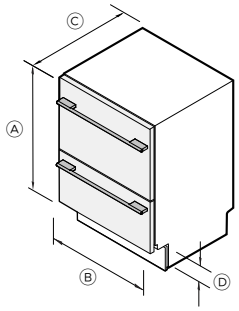

ISO VIEW

		In	mm
A	Overall height*	32 1/4-34 5/8	820 – 880
B	Overall width	23 9/16	599
C	Overall depth**	21 3/4	553
D	Height from bottom of door to floor*	4-6 5/16	101 - 161

* Depending on adjustment of levelling feet

**Does not include integrated door panel.

Black toe kick supplied; custom toe kick optional

CAVITY DIMENSIONS

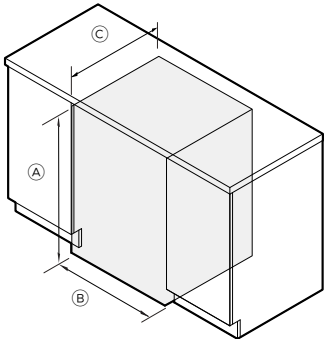

ISO VIEW

		In	mm
A	Overall height*	32 3/8 - 34 3/4	822 - 882
B	Overall width	min 23 5/8	min 600
C	Overall depth	min 22 13/16	min 580

*Depending on adjustment of levelling feet

PLUMBING AND ELECTRICAL

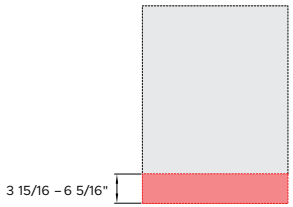

REAR VIEW

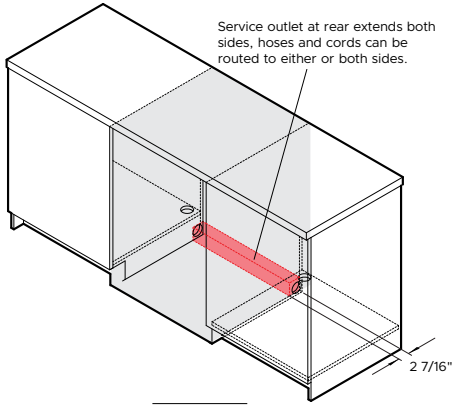

ISO VIEW

PRODUCT SPECIFICATIONS	
Weight	130 lbs (59 kg)
Packaged Weight	147 lbs (67 kg)
Packaged dimensions	**H** 36 7/8" (937mm) x **W** 27 9/16" (700mm) x **D** 28 3/8 (720mm)
Electrical	
Dedicated Service (A)	10A
Rated Power (W)	1200
Supply (Hz)	60
Voltage (V)	120
Plumbing	
Supply	3/8" male compression fitting or Nut 9/16"
Pressure	Min 0.03 Mpa (4.35psi), Max 1 Mpa (145psi) Cold water connection @ 20°C

The models shown in this Planning Guide may not be available in all markets and are subject to change at any time. Product specifications may vary from those shown. This Planning Guide should not be used as installation guidance for any product. Further information is required to safely and correctly install the products featured here. Specific installation guidance will be available with the product on delivery and on our website fisherpaykel.com

© FISHER & PAYKEL APPLIANCES LIMITED 2026

DD24DT4I2, DD24DT4HI2

OVERVIEW

The Series 9 Integrated Tall Double DishDrawer™ Dishwasher combines independent double drawers with added height to accommodate larger dishes and cookware. Designed for flexible, counter-height installation, it supports varied dish care needs while advanced wash technology and intuitive controls help support improved energy and water efficiency.

PRODUCTS

Series 9 Integrated Tall Double DishDrawer™ Dishwasher
DD24DT4I2, DD24DT4HI2 (water softener model)

SERIES & STYLE

Series 9
Custom and accessory handle options

FEATURES

1. Independent drawers can run separately or together to suit varied dish loads.
2. Panel-ready design supports seamless integration within custom cabinetry.
3. Extra height fits full-size dinner plates up to 12" in diameter.
4. Designed for counter-height installation to support ergonomic access.
5. Capacitive touch controls make everyday operation simple and intuitive.
6. Advanced wash technology supports improved energy and water efficiency.
7. Adaptable racking accommodates a range of dishware and cookware.
8. Versatile wash cycles and modifiers support varied dish care needs.
9. Fan-assisted drying helps leave dishes ready to use.
10. SmartHQ™ connectivity offers remote control and notifications through the app.
11. New Door installation adjustment system allows fast and accurate door alignment to the surrounding cabinetry. Designed to fit, perfect results, beautiful to use.

The models shown in this Planning Guide may not be available in all markets and are subject to change at any time. Product specifications may vary from those shown. This Planning Guide should not be used as installation guidance for any product. Further information is required to safely and correctly install the products featured here. Specific installation guidance will be available with the product on delivery and on our website fisherpaykel.com

PRODUCT DIMENSIONS

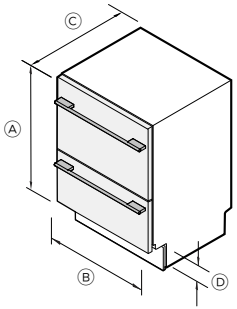

ISO VIEW

CAVITY DIMENSIONS

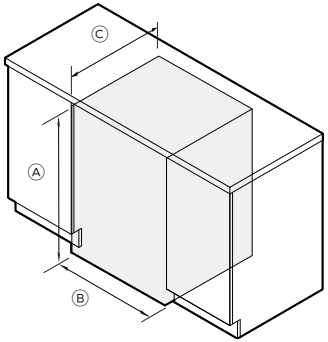

ISO VIEW

PLUMBING AND ELECTRICAL

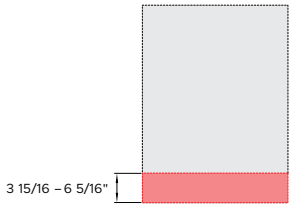

REAR VIEW

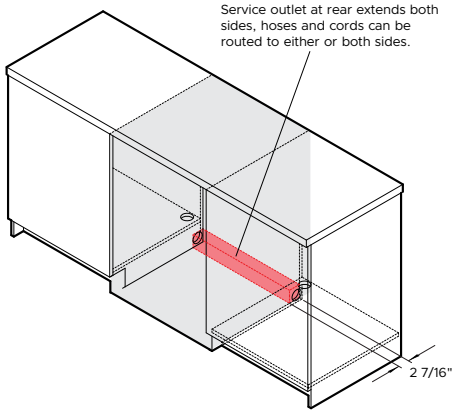

ISO VIEW

		In	mm
A	Overall height*	34-36 3/8	865-925
B	Overall width	23 9/16	599
C	Overall depth**	21 3/4	553
D	Height from bottom of door to floor*	4-6 5/16	101 - 161

* Depending on adjustment of levelling feet

**Does not include integrated door panel.

Black toe kick supplied; custom toe kick optional

		In	mm
A	Overall height*	min 34 1/8 - 36 1/2	867 - 927
B	Overall width	min 23 5/8	min 600
C	Overall depth	min 22 13/16	min 580

*Depending on adjustment of levelling feet

PRODUCT SPECIFICATIONS	
Weight	130 lbs (59 kg)
Packaged Weight	147 lbs (67 kg)
Packaged dimensions	**H** 36 7/8" (937mm) x **W** 27 9/16" (700mm) x **D** 28 3/8 (720mm)
Electrical	
Dedicated Service (A)	10A
Rated Power (W)	1200
Supply (Hz)	60
Voltage (V)	120
Plumbing	
Supply	3/8" male compression fitting or Nut 9/16"
Pressure	Min 0.03 Mpa (4.35psi), Max 1 Mpa (145psi) Cold water connection @ 20°C
	Water softener model: Min 0.1 Mpa (14.5psi), Max 1 Mpa (145psi) Cold water connection @ 20°C

The models shown in this Planning Guide may not be available in all markets and are subject to change at any time. Product specifications may vary from those shown. This Planning Guide should not be used as installation guidance for any product. Further information is required to safely and correctly install the products featured here. Specific installation guidance will be available with the product on delivery and on our website fisherpaykel.com

© FISHER & PAYKEL APPLIANCES LIMITED 2026

DD24ST4DX2

OVERVIEW

The Series 9 Contemporary Tall Single DishDrawer™ Dishwasher extends the drawer format with added height to accommodate larger dishes and cookware. Designed for true half-load dish care, it supports flexible placement within the kitchen while advanced wash technology and intuitive controls help support improved energy and water efficiency.

PRODUCTS

Series 9 Contemporary Tall Single DishDrawer™ Dishwasher
DD24ST4DX2

SERIES & STYLE

Series 9
Contemporary Proud Handle

FEATURES

1. Tall single drawer designed for true half-load dish care.
2. Designed to suit everyday dish loads without needing to fill a full dishwasher.
3. Extra height fits larger dishes and cookware, including full-size dinner plates up to 12" in diameter.
4. Capacitive touch controls make everyday operation simple and intuitive.
5. Designed for counter-height installation to support ergonomic access.
6. Advanced wash technology supports improved energy and water efficiency.
7. Versatile wash cycles and modifiers support varied dish care needs.
8. Fan-assisted drying helps leave dishes ready to use.
9. Contemporary stainless steel finish suits modern kitchen designs.
10. Can be paired with other DishDrawer™ Dishwasher models or installed on its own.

The models shown in this Planning Guide may not be available in all markets and are subject to change at any time. Product specifications may vary from those shown. This Planning Guide should not be used as installation guidance for any product. Further information is required to safely and correctly install the products featured here. Specific installation guidance will be available with the product on delivery and on our website fisherpaykel.com

PRODUCT DIMENSIONS

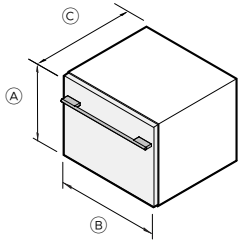

ISO VIEW

CAVITY DIMENSIONS

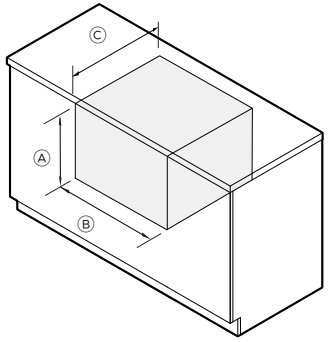

ISO VIEW

PLUMBING AND ELECTRICAL

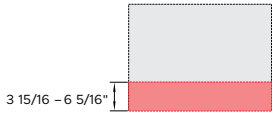

REAR VIEW

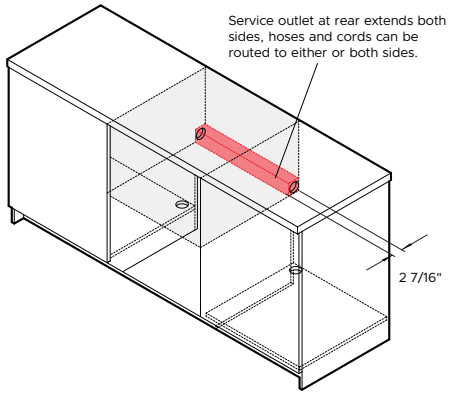

ISO VIEW

		In	mm
A	Overall height	17 7/8	454
B	Overall width	23 9/16	599
C	Overall depth	22 9/16	573

		In	mm
A	Overall height	min 18	min 457
B	Overall width	min 23 5/8	min 600
C	Overall depth	min 22 5/8	min 575

PRODUCT SPECIFICATIONS

Weight	72 lbs (33 kg)
Packaged Weight	88 lbs (40 kg)
Packaged dimensions	**H** 20 1/2" (520mm) x **W** 27 9/16" (700mm) x **D** 28 3/8 (720mm)
Electrical	
Dedicated Service (A)	5A
Supply (Hz)	60
Rated Power (W)	600
Voltage (V)	120
Plumbing	
Supply	3/8" male compression fitting or Nut 9/16".
Pressure	Min 0.03 Mpa (4.35psi), Max 1 Mpa (145psi) Cold water connection @ 20°C

The models shown in this Planning Guide may not be available in all markets and are subject to change at any time. Product specifications may vary from those shown. This Planning Guide should not be used as installation guidance for any product. Further information is required to safely and correctly install the products featured here. Specific installation guidance will be available with the product on delivery and on our website fisherpaykel.com

© FISHER & PAYKEL APPLIANCES LIMITED 2026

DD24S2CX2

OVERVIEW

The Series 7 Contemporary Single DishDrawer™ Dishwasher represents the next evolution of drawer design, delivering advanced performance, quiet operation and true half-load dish care. Its single-drawer format supports flexible kitchen planning, while updated wash technology enables efficient use of energy and water to suit everyday living.

PRODUCTS

Series 7 Contemporary Single DishDrawer™ Dishwasher
DD24S2CX2

SERIES & STYLE

Series 7
Pocket Handle

FEATURES

1. Single drawer format supports true half-load dish care.
2. Designed to suit everyday dish loads without needing to fill a full dishwasher.
3. Can be installed at counter height for easy access with minimal bending.
4. Accommodates full-size dinner plates within a single drawer.
5. Adaptable racking allows flexibility for different dishware and cookware.
6. Versatile wash cycles and modifiers support varied dish care needs.
7. Fan-assisted drying helps leave dishes ready to use.
8. Quiet operation suits open-plan kitchen environments.
9. SmartHQ™ connectivity offers remote control and notifications through the app.
10. Can be paired with other DishDrawer™ Dishwasher models or installed on its own.

The models shown in this Planning Guide may not be available in all markets and are subject to change at any time. Product specifications may vary from those shown. This Planning Guide should not be used as installation guidance for any product. Further information is required to safely and correctly install the products featured here. Specific installation guidance will be available with the product on delivery and on our website fisherpaykel.com

PRODUCT DIMENSIONS

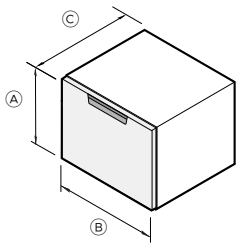

ISO VIEW

		In	mm
A	Overall height	16 1/8	410
B	Overall width	23 9/16	599
C	Overall depth	22 9/16	573

CAVITY DIMENSIONS

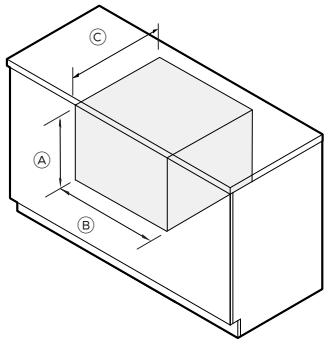

ISO VIEW

		In	mm
A	Overall height	min 16 1/4	min 412
B	Overall width	min 23 5/8	min 600
C	Overall depth	min 22 5/8	min 575

PLUMBING AND ELECTRICAL

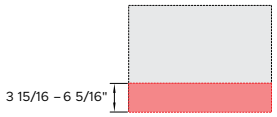

REAR VIEW

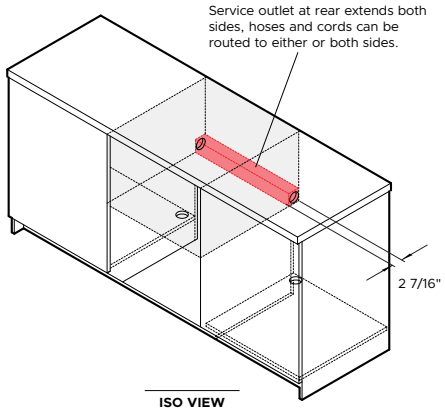

ISO VIEW

PRODUCT SPECIFICATIONS

Weight	72 lbs (33 kg)
Packaged Weight	88 lbs (40 kg)
Packaged dimensions	**H** 20 1/2" (520mm) x **W** 27 9/16" (700mm) x **D** 28 3/8 (720mm)
Electrical	
Dedicated Service (A)	5A
Supply (Hz)	60
Rated Power (W)	600
Voltage (V)	120
Plumbing	
Supply	3/8" male compression fitting or Nut 9/16".
Pressure	Min 0.03 Mpa (4.35psi), Max 1 Mpa (145psi) Cold water connection @ 20°C

The models shown in this Planning Guide may not be available in all markets and are subject to change at any time. Product specifications may vary from those shown. This Planning Guide should not be used as installation guidance for any product. Further information is required to safely and correctly install the products featured here. Specific installation guidance will be available with the product on delivery and on our website fisherpaykel.com

© FISHER & PAYKEL APPLIANCES LIMITED 2026

DD24ST2CX2

OVERVIEW

The Series 7 Contemporary Tall Single DishDrawer™ Dishwasher builds on the drawer format with added height to accommodate larger plates and cookware. Designed for true half-load dish care, it supports flexible kitchen planning and everyday use, while updated wash technology enables efficient use of energy and water.

PRODUCTS

Series 7 Contemporary Tall Single DishDrawer™ Dishwasher
DD24ST2CX2

SERIES & STYLE

Series 7
Pocket Handle

FEATURES

1. Single drawer format supports true half-load dish care.
2. Designed to suit everyday dish loads without needing to fill a full dishwasher.
3. Extra height fits larger dishes and cookware, including full-size dinner plates up to 12" in diameter.
4. Can be installed at counter height for easy access with minimal bending.
5. Adaptable racking allows flexibility for different dishware and cookware.
6. Versatile wash cycles and modifiers support varied dish care needs.
7. Fan-assisted drying helps leave dishes ready to use.
8. Quiet operation suits open-plan kitchen environments.
9. Contemporary stainless steel finish suits modern kitchen designs.
10. Can be specified on its own or paired with other DishDrawer™ Dishwasher models.

The models shown in this Planning Guide may not be available in all markets and are subject to change at any time. Product specifications may vary from those shown. This Planning Guide should not be used as installation guidance for any product. Further information is required to safely and correctly install the products featured here. Specific installation guidance will be available with the product on delivery and on our website fisherpaykel.com

PRODUCT DIMENSIONS

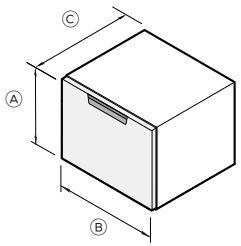

ISO VIEW

		In	mm
A	Overall height	17 7/8	454
B	Overall width	23 9/16	599
C	Overall depth	22 9/16	573

CAVITY DIMENSIONS

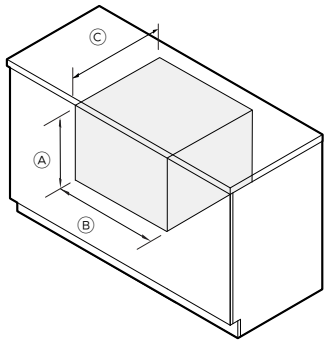

ISO VIEW

		In	mm
A	Overall height	min 18	min 457
B	Overall width	min 23 5/8	min 600
C	Overall depth	min 22 5/8	min 575

PLUMBING AND ELECTRICAL

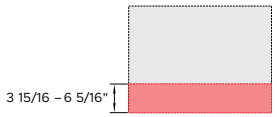

REAR VIEW

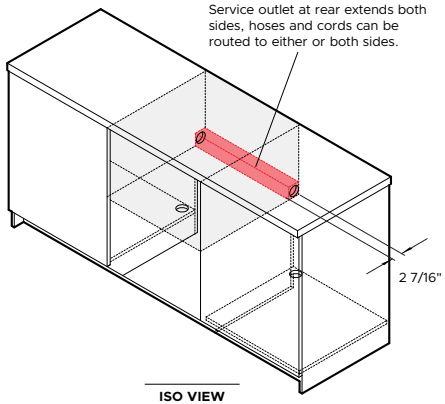

ISO VIEW

PRODUCT SPECIFICATIONS

Weight	72 lbs (33 kg)
Packaged Weight	88 lbs (40 kg)
Packaged dimensions	**H** 20 1/2" (520mm) x **W** 27 9/16" (700mm) x **D** 28 3/8 (720mm)
Electrical	
Dedicated Service (A)	5A
Supply (Hz)	60
Rated Power (W)	600
Voltage (V)	120
Plumbing	
Supply	3/8" male compression fitting or Nut 9/16".
Pressure	Min 0.03 Mpa (4.35psi), Max 1 Mpa (145psi) Cold water connection @ 20°C

The models shown in this Planning Guide may not be available in all markets and are subject to change at any time. Product specifications may vary from those shown. This Planning Guide should not be used as installation guidance for any product. Further information is required to safely and correctly install the products featured here. Specific installation guidance will be available with the product on delivery and on our website fisherpaykel.com

© FISHER & PAYKEL APPLIANCES LIMITED 2026

DD24D2CX2

OVERVIEW

The Series 7 Contemporary Double DishDrawer™ Dishwasher represents the next evolution of drawer design, offering advanced performance and everyday flexibility. Its double-drawer format allows each drawer to operate independently or together, while updated wash technology supports efficient use of energy and water to suit the demands of everyday living.

PRODUCTS

Series 7 Contemporary Double DishDrawer™ Dishwasher
DD24D2CX2

SERIES & STYLE

Series 7
Pocket Handle

FEATURES

1. Independent drawers can run separately or together.
2. Two drawers allow flexible dish care across multiple loads.
3. Can be installed at counter height for easy access with minimal bending.
4. Each drawer fits full-size dinner plates up to 11" in diameter.
5. Adaptable racking accommodates a range of dishware and cookware.
6. Versatile wash cycles and modifiers support varied dish care needs.
7. Fan-assisted drying helps leave dishes ready to use.
8. Quiet operation suits open-plan kitchen environments.
9. Contemporary stainless steel finish suits modern kitchen designs.
10. SmartHQ™ connectivity offers remote control and notifications through the app.

The models shown in this Planning Guide may not be available in all markets and are subject to change at any time. Product specifications may vary from those shown. This Planning Guide should not be used as installation guidance for any product. Further information is required to safely and correctly install the products featured here. Specific installation guidance will be available with the product on delivery and on our website fisherpaykel.com

PRODUCT DIMENSIONS

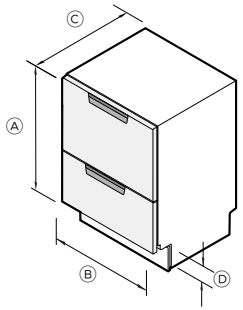

ISO VIEW

		In	mm
A	Overall height*	32 1/4-34 5/8	820-880
B	Overall width	23 9/16	599
C	Overall depth	22 9/16	573
D	Height from bottom of door to floor*	4-6 5/16	101 - 161

* Depending on adjustment of levelling feet

CAVITY DIMENSIONS

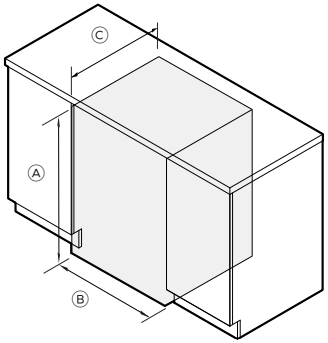

ISO VIEW

		In	mm
A	Overall height*	32 3/8 - 34 3/4	822 - 882
B	Overall width	min 23 5/8	min 600
C	Overall depth	min 22 13/16	min 580

*Depending on adjustment of levelling feet

PLUMBING AND ELECTRICAL

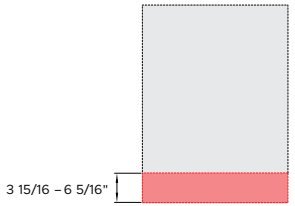

REAR VIEW

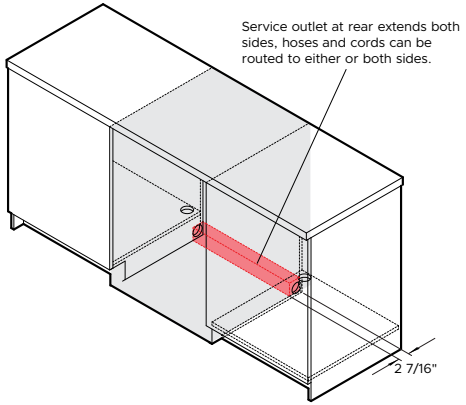

ISO VIEW

PRODUCT SPECIFICATIONS	
Weight	130 lbs (59 kg)
Packaged Weight	147 lbs (67 kg)
Packaged dimensions	**H** 36 7/8" (937mm) x **W** 27 9/16" (700mm) x **D** 28 3/8 (720mm)
Electrical	
Dedicated Service (A)	10A
Rated Power (W)	1200
Supply (Hz)	60
Voltage (V)	120
Plumbing	
Supply	3/8" male compression fitting or Nut 9/16"
Pressure	Min 0.03 Mpa (4.35psi), Max 1 Mpa (145psi) Cold water connection @ 20°C

The models shown in this Planning Guide may not be available in all markets and are subject to change at any time. Product specifications may vary from those shown. This Planning Guide should not be used as installation guidance for any product. Further information is required to safely and correctly install the products featured here. Specific installation guidance will be available with the product on delivery and on our website fisherpaykel.com

© FISHER & PAYKEL APPLIANCES LIMITED 2026

DD24DT2CX2

OVERVIEW

The Series 7 Contemporary Tall Double DishDrawer™ Dishwasher extends the drawer format with added height and dual-drawer flexibility. Independent drawers support varied dish care needs, while the taller configuration accommodates larger dishes and cookware. Designed for counter-height installation, it supports ergonomic access and flexible kitchen planning in contemporary spaces.

PRODUCTS

Series 7 Contemporary Tall Double DishDrawer™ Dishwasher
DD24DT2CX2

SERIES & STYLE

Series 7
Pocket Handle

FEATURES

1. Tall double drawer format supports flexible dish care across two independent drawers.
2. Independent drawers can run separately or together to suit everyday dish care needs.
3. Can be installed at counter height for easy access with minimal bending.
4. Extra height in the top drawer fits larger dishes and cookware, including full-size dinner plates up to 12" in diameter.
5. Adaptable racking accommodates a range of dishware and cookware.
6. Versatile wash cycles and modifiers support varied dish care needs.
7. Fan-assisted drying helps leave dishes ready to use.
8. Quiet operation suits open-plan kitchen environments.
9. Contemporary stainless steel finish suits modern kitchen designs.
10. SmartHQ™ connectivity offers remote control and notifications through the app.

The models shown in this Planning Guide may not be available in all markets and are subject to change at any time. Product specifications may vary from those shown. This Planning Guide should not be used as installation guidance for any product. Further information is required to safely and correctly install the products featured here. Specific installation guidance will be available with the product on delivery and on our website fisherpaykel.com

PRODUCT DIMENSIONS

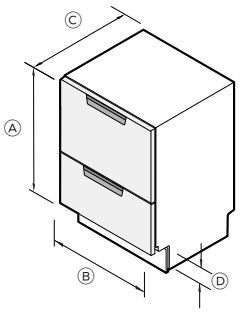

ISO VIEW

		In	mm
A	Overall height*	34-36 3/8	865-925
B	Overall width	23 9/16	599
C	Overall depth	22 9/16	573
D	Height from bottom of door to floor*	4-6 5/16	101 - 161

* Depending on adjustment of levelling feet

CAVITY DIMENSIONS

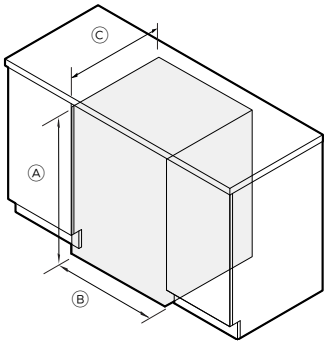

ISO VIEW

		In	mm
A	Overall height*	min 34 1/8 - 36 1/2	867 - 927
B	Overall width	min 23 5/8	min 600
C	Overall depth	min 22 13/16	min 580

*Depending on adjustment of levelling feet

PLUMBING AND ELECTRICAL

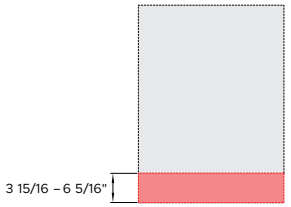

REAR VIEW

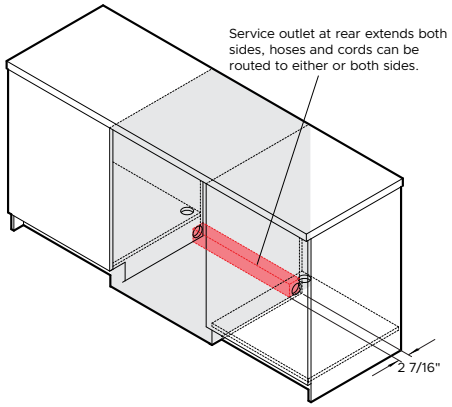

ISO VIEW

PRODUCT SPECIFICATIONS	
Weight	130 lbs (59 kg)
Packaged Weight	147 lbs (67 kg)
Packaged dimensions	**H** 36 7/8" (937mm) x **W** 27 9/16" (700mm) x **D** 28 3/8 (720mm)
Electrical	
Dedicated Service (A)	10A
Rated Power (W)	1200
Supply (Hz)	60
Voltage (V)	120
Plumbing	
Supply	3/8" male compression fitting or Nut 9/16"
Pressure	Min 0.03 Mpa (4.35psi), Max 1 Mpa (145psi) Cold water connection @ 20°C

The models shown in this Planning Guide may not be available in all markets and are subject to change at any time. Product specifications may vary from those shown. This Planning Guide should not be used as installation guidance for any product. Further information is required to safely and correctly install the products featured here. Specific installation guidance will be available with the product on delivery and on our website fisherpaykel.com

© FISHER & PAYKEL APPLIANCES LIMITED 2026

DD24DT4DX2

OVERVIEW

The Series 9 Contemporary Tall Double DishDrawer™ Dishwasher combines independent double drawers with added height to accommodate larger dishes and cookware. Designed for flexible, counter-height installation, it supports varied dish care needs while advanced wash technology and intuitive controls help support improved energy and water efficiency.

PRODUCTS

Series 9 Contemporary Tall Double DishDrawer™ Dishwasher
DD24DT4DX2

SERIES & STYLE

Series 9
Contemporary Proud Handle

FEATURES

1. Independent drawers can run separately or together to suit varied dish loads.
2. Tall double drawer format supports flexible dish care across two independent drawers.
3. Extra height fits full-size dinner plates up to 12" in diameter.
4. Designed for counter-height installation to support ergonomic access.
5. Capacitive touch controls make everyday operation simple and intuitive.
6. Advanced wash technology supports improved energy and water efficiency.
7. Adaptable racking accommodates a range of dishware and cookware.
8. Versatile wash cycles and modifiers support varied dish care needs.
9. Fan-assisted drying helps leave dishes ready to use.
10. SmartHQ™ connectivity offers remote control and notifications through the app.

The models shown in this Planning Guide may not be available in all markets and are subject to change at any time. Product specifications may vary from those shown. This Planning Guide should not be used as installation guidance for any product. Further information is required to safely and correctly install the products featured here. Specific installation guidance will be available with the product on delivery and on our website fisherpaykel.com

PRODUCT DIMENSIONS

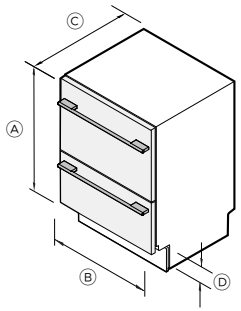

ISO VIEW

		In	mm
A	Overall height*	34-36 3/8	865-925
B	Overall width	23 9/16	599
C	Overall depth	22 9/16	573
D	Height from bottom of door to floor*	4-6 5/16	101 - 161

* Depending on adjustment of levelling feet

CAVITY DIMENSIONS

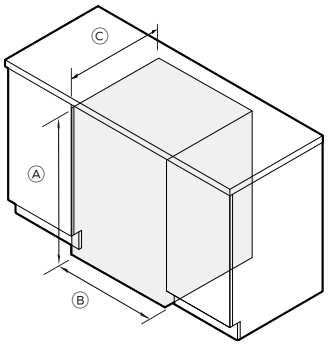

ISO VIEW

		In	mm
A	Overall height*	min 34 1/8 - 36 1/2	867 - 927
B	Overall width	min 23 5/8	min 600
C	Overall depth	min 22 13/16	min 580

*Depending on adjustment of levelling feet

PLUMBING AND ELECTRICAL

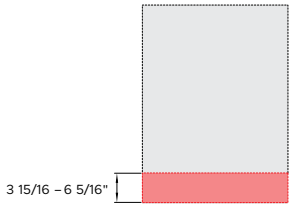

REAR VIEW

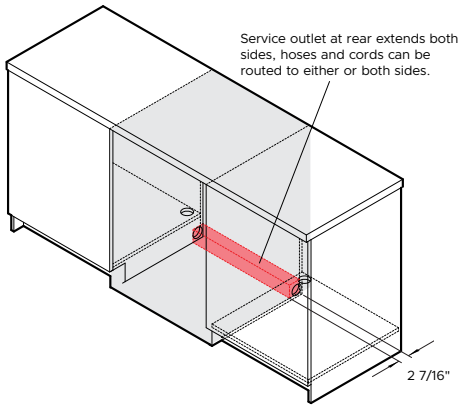

ISO VIEW

PRODUCT SPECIFICATIONS	
Weight	130 lbs (59 kg)
Packaged Weight	147 lbs (67 kg)
Packaged dimensions	**H** 36 7/8" (937mm) x **W** 27 9/16" (700mm) x **D** 28 3/8 (720mm)
Electrical	
Dedicated Service (A)	10A
Supply (Hz)	60
Rated Power (W)	1200
Voltage (V)	120
Plumbing	
Supply	3/8" male compression fitting or Nut 9/16"
Pressure	Min 0.03 Mpa (4.35psi), Max 1 Mpa (145psi) Cold water connection @ 20°C

The models shown in this Planning Guide may not be available in all markets and are subject to change at any time. Product specifications may vary from those shown. This Planning Guide should not be used as installation guidance for any product. Further information is required to safely and correctly install the products featured here. Specific installation guidance will be available with the product on delivery and on our website fisherpaykel.com

© FISHER & PAYKEL APPLIANCES LIMITED 2026

DD24ST4PX2

OVERVIEW

The Series 9 Professional Tall Single DishDrawer™ Dishwasher extends the drawer format with added height to accommodate larger dishes and cookware. Designed for true half-load dish care, it supports flexible placement within the kitchen while advanced wash technology and intuitive controls help support improved energy and water efficiency.

PRODUCTS

Series 9 Professional Tall Single DishDrawer™ Dishwasher
DD24ST4PX2

SERIES & STYLE

Series 9
Professional Proud Handle

FEATURES

1. Tall single drawer designed for true half-load dish care.
2. Professional-style stainless steel finish suits premium kitchen designs.
3. Extra height fits larger dishes and cookware, including full-size dinner plates up to 12" in diameter.
4. Capacitive touch controls make everyday operation simple and intuitive.
5. Designed for counter-height installation to support ergonomic access.
6. Advanced wash technology supports improved energy and water efficiency.
7. Adaptable racking accommodates a range of dishware and cookware.
8. Versatile wash cycles and modifiers support varied dish care needs.
9. Fan-assisted drying helps leave dishes ready to use.
10. Can be paired with other DishDrawer™ Dishwasher models or installed on its own.

The models shown in this Planning Guide may not be available in all markets and are subject to change at any time. Product specifications may vary from those shown. This Planning Guide should not be used as installation guidance for any product. Further information is required to safely and correctly install the products featured here. Specific installation guidance will be available with the product on delivery and on our website fisherpaykel.com

PRODUCT DIMENSIONS

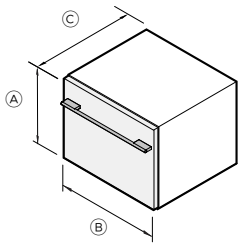

ISO VIEW

		In	mm
A	Overall height	17 7/8	454
B	Overall width	23 9/16	599
C	Overall depth	22 9/16	573

CAVITY DIMENSIONS

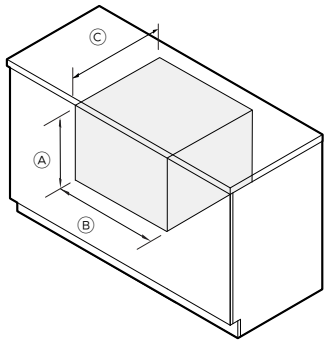

ISO VIEW

		In	mm
A	Overall height	min 18	min 457
B	Overall width	min 23 5/8	min 600
C	Overall depth	min 22 5/8	min 575

PLUMBING AND ELECTRICAL

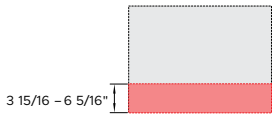

REAR VIEW

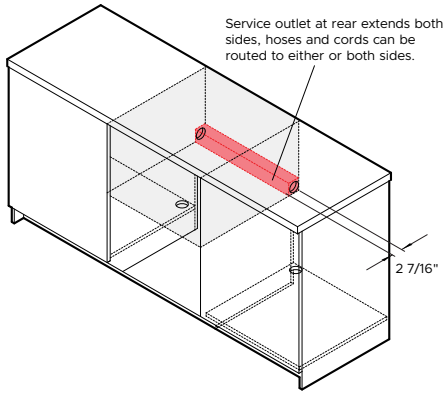

ISO VIEW

PRODUCT SPECIFICATIONS

Weight	72 lbs (33 kg)
Packaged Weight	88 lbs (40 kg)
Packaged dimensions	**H** 20 1/2" (520mm) x **W** 27 9/16" (700mm) x **D** 28 3/8 (720mm)
Electrical	
Dedicated Service (A)	5A
Supply (Hz)	60
Rated Power (W)	600
Voltage (V)	120
Plumbing	
Supply	3/8" male compression fitting or Nut 9/16".
Pressure	Min 0.03 Mpa (4.35psi), Max 1 Mpa (145psi) Cold water connection @ 20°C

The models shown in this Planning Guide may not be available in all markets and are subject to change at any time. Product specifications may vary from those shown. This Planning Guide should not be used as installation guidance for any product. Further information is required to safely and correctly install the products featured here. Specific installation guidance will be available with the product on delivery and on our website fisherpaykel.com

© FISHER & PAYKEL APPLIANCES LIMITED 2026

DD24DT4PX2

OVERVIEW

The Series 9 Professional Tall Double DishDrawer™ Dishwasher combines independent double drawers with added height to accommodate larger dishes and cookware. Designed for flexible, counter-height installation, it supports varied dish care needs while advanced wash technology and intuitive controls help support improved energy and water efficiency.

PRODUCTS

Series 9 Professional Tall Double DishDrawer™ Dishwasher
DD24DT4PX2

SERIES & STYLE

Series 9
Professional Proud Handle

FEATURES

1. Independent drawers can run separately or together to suit varied dish loads.
2. Professional-style stainless steel finish suits premium kitchen designs.
3. Extra height fits full-size dinner plates up to 12" in diameter.
4. Designed for counter-height installation to support ergonomic access.
5. Capacitive touch controls make everyday operation simple and intuitive.
6. Advanced wash technology supports improved energy and water efficiency.
7. Adaptable racking accommodates a range of dishware and cookware.
8. Versatile wash cycles and modifiers support varied dish care needs.
9. Fan-assisted drying helps leave dishes ready to use.
10. SmartHQ™ connectivity offers remote control and notifications through the app.

The models shown in this Planning Guide may not be available in all markets and are subject to change at any time. Product specifications may vary from those shown. This Planning Guide should not be used as installation guidance for any product. Further information is required to safely and correctly install the products featured here. Specific installation guidance will be available with the product on delivery and on our website fisherpaykel.com

PRODUCT DIMENSIONS

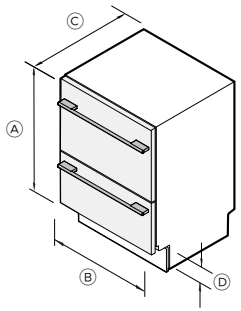

ISO VIEW

		In	mm
A	Overall height*	34-36 3/8	865-925
B	Overall width	23 9/16	599
C	Overall depth	22 9/16	573
D	Height from bottom of door to floor*	4-6 5/16	101 - 161

* Depending on adjustment of levelling feet

CAVITY DIMENSIONS

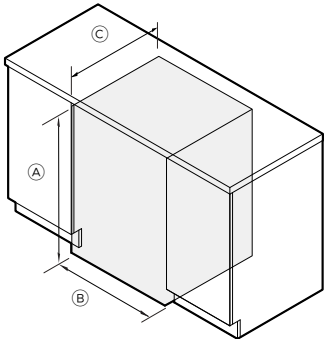

ISO VIEW

		In	mm
A	Overall height*	min 34 1/8 - 36 1/2	867 - 927
B	Overall width	min 23 5/8	min 600
C	Overall depth	min 22 13/16	min 580

*Depending on adjustment of levelling feet

PLUMBING AND ELECTRICAL

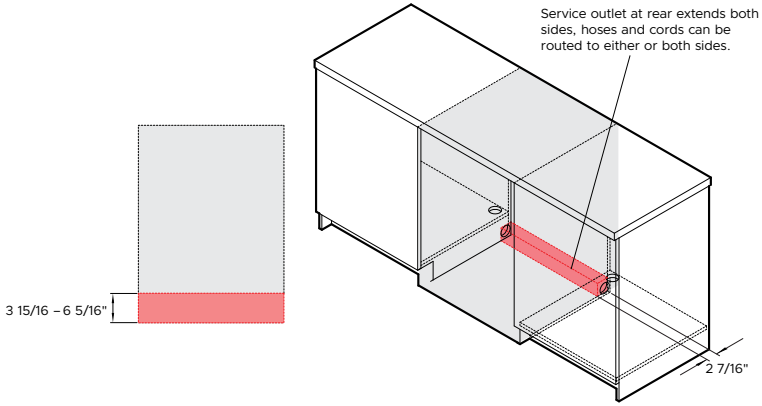

REAR VIEW

ISO VIEW

PRODUCT SPECIFICATIONS	
Weight	130 lbs (59 kg)
Packaged Weight	147 lbs (67 kg)
Packaged dimensions	**H** 36 7/8" (937mm) x **W** 27 9/16" (700mm) x **D** 28 3/8 (720mm)
Electrical	
Dedicated Service (A)	10A
Supply (Hz)	60
Rated Power (W)	1200
Voltage (V)	120
Plumbing	
Supply	3/8" male compression fitting or Nut 9/16"
Pressure	Min 0.03 Mpa (4.35psi), Max 1 Mpa (145psi) Cold water connection @ 20°C

The models shown in this Planning Guide may not be available in all markets and are subject to change at any time. Product specifications may vary from those shown. This Planning Guide should not be used as installation guidance for any product. Further information is required to safely and correctly install the products featured here. Specific installation guidance will be available with the product on delivery and on our website fisherpaykel.com

© FISHER & PAYKEL APPLIANCES LIMITED 2026

FISHER & PAYKEL